PARTS MANUAL

NOTICE: THIS CONTAINS CONFIDENTIAL, PROPRIETARY AND NON-PUBLIC INFORMATION OF ITEK GRAPHIX CORP. DUPLICATION OR REPRODUCTION (IN WHOLE OR IN PART) OR DISCLOSURE HEREOF TO UNAUTHORIZED PERSONS WITHOUT THE PRIOR WRITTEN CONSENT OF ITEK GRAPHIX CORP. GRAPHIC SYSTEMS DIVISION IS PROHIBITED.

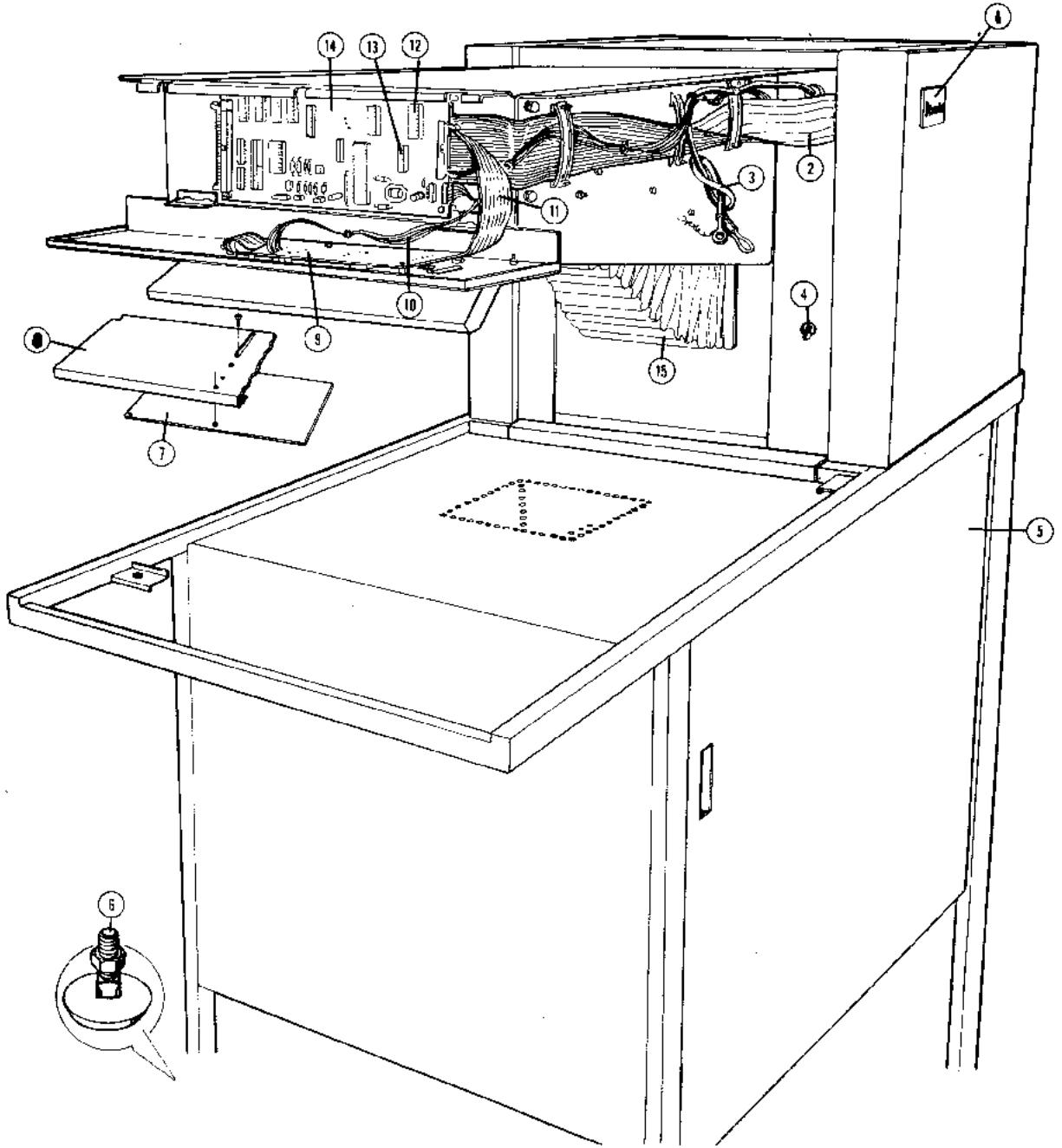

NOTICE: THIS CONTAINS CONFIDENTIAL, PROPRIETARY AND NON-PUBLIC INFORMATION OF ITEK GRAPHIX CORP. DUPLICATION OR REPRODUCTION IN WHOLE OR IN PART OR DISCLOSURE HEREOF TO UNAUTHORIZED PERSONS WITHOUT THE PRIOR WRITTEN CONSENT OF ITEK GRAPHIX CORP. GRAPHIC SYSTEMS DIVISION IS PROHIBITED.

OVERHANG

REF.	DESCRIPTION	PART NO.	QTY.	AFTER S/N	USE P/N	COMMENTS
1	Logo	19641701				
2	CPU board cable assy.	19972501				
3	Lamp cable latch side	20251501				
NS	Lamp cable hinge side	20260101				
4	Circuit breaker	09346500				
5	Processor door assy.	20008001				
6	Foot	19604101	4			
7	Mounting plate	20160101				
8	Light shield	20178601				
9	Display P.C.B. assy.	20086701				
	Lamp, Red, "JAM"	19898001				
	Lamp, Red, "LTS" & "DE'	20286801				
10	D.C. power cable assy.	19972601				
11	Display board cable assy.	19972401				
12	Prom	20265701				
13	Memory IC	40124570				
14	C.P.U. P.C.B. assy.	20161501				
15	Bellows assy.	20113002				
NS	Drain bucket	20252401				
NS	Cabinet fan	E0216500				
NS	Cabinet drip pan	20272701				

NOTE: Machines equipped with plate counters include the following parts:

20272401 - Cable
20272501 -Counter
20272601 - Front panel assy.

NOTICE: THIS CONTAINS CONFIDENTIAL PROPRIETARY AND NON-PUBLIC INFORMATION OF ITEM GRAPHIX CORP. DUPLICATION OR REPRODUCTION (IN WHOLE OR IN PART) OR DISCLOSURE, REFERENCE TO OR UTILIZATION BY UNAUTHORIZED PERSONS WITHOUT THE PRIOR WRITTEN CONSENT OF ITEM GRAPHIX CORP. GRAPHIC SYSTEMS DIVISION IS PROHIBITED.

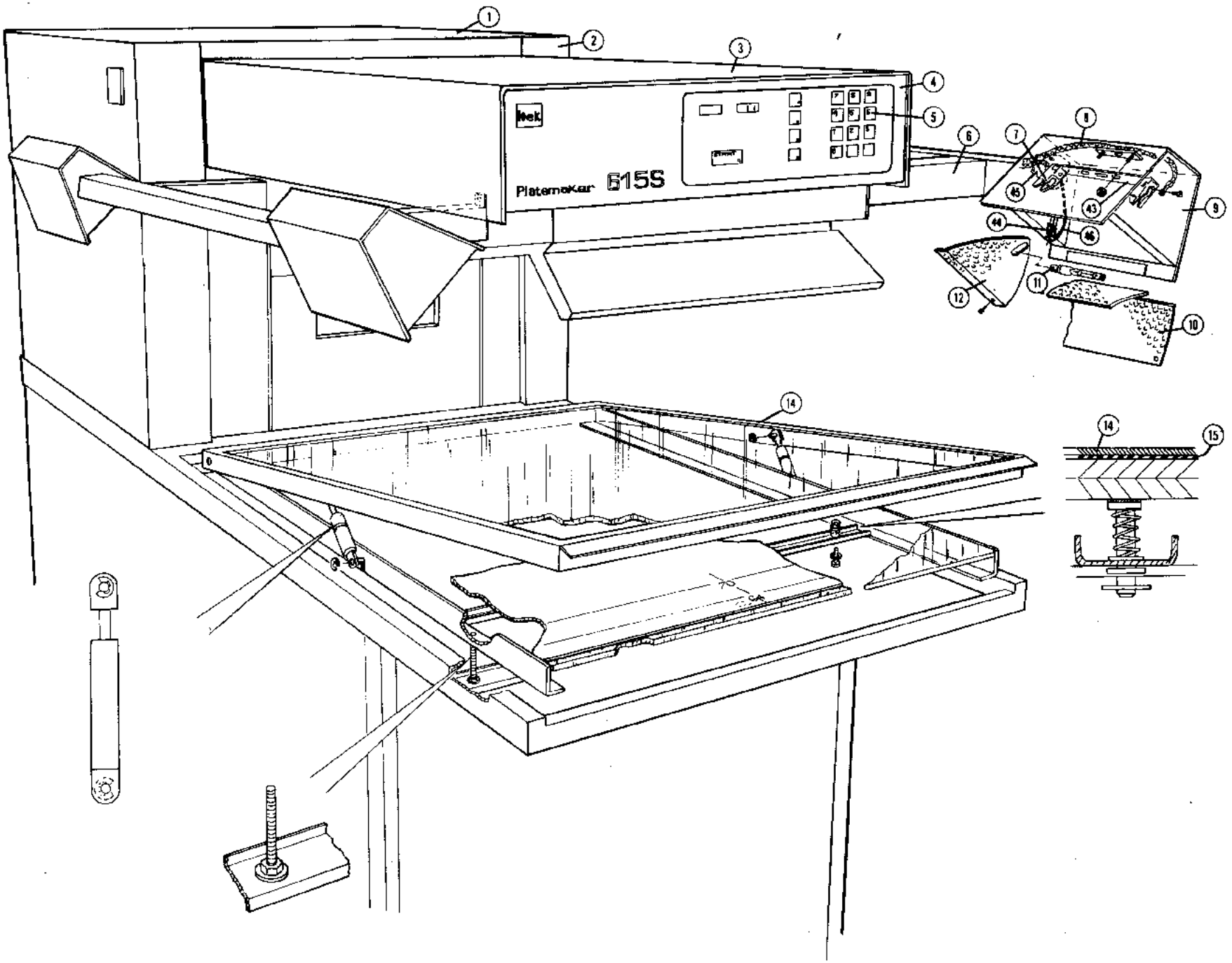

NOTICE: THIS CONTAINS CONFIDENTIAL, PROPRIETARY AND NON-PUBLIC INFORMATION OF ITEK GRAPHIX CORP. DUPLICATION OR REPRODUCTION (IN WHOLE OR IN PART) OR DISCLOSURE HEREOF TO UNAUTHORIZED PERSONS WITHOUT THE PRIOR WRITTEN CONSENT OF ITEK GRAPHIX CORP. GRAPHIC SYSTEMS DIVISION IS PROHIBITED.

MOVABLE LAMP ARMS KIT - 20247401

COPYBOARD ASSEMBLY - 20121101

REF.	DESCRIPTION	PART NO.	QTY.	AFTER S/N	USE P/N	COMMENTS
1	Top Cover	20047602				
	Felt tape	40151373				
2	Side cover (latch side)	20048001				
3	Overhang cover assy.	20047703				
4	Control Panel (silk screen)	20127702				
5	Keypad Assy.	20085003				
6	Movable lamp arm H.S.	20244601		1349	20403601	
	Movable lamp arm L.S.	20244701		1349	20403501	
7	Socket bracket assy.	20131201	4	1349	N/A	
	Socket only	09188201	8			
8	Lamp socket wire	20131001	4			
9	Lamp shell assy. (P/O #6)	20107101	4	1349	20213301	
10	Reflector	09190100	4	1349	20509701	
	Machine screw 4-40 x ⅛"	H0030000				
11	Quartz lamp 500W	19068201				
12	Reflector end	09188700	8	1349	20509601	
14	Cover weldment assy.	20120701				
15	Tape	40151356				
16	Cover glass	20097702				
17	Platen glass	20097802				
18	Adhesive	40143535	A/R			
	Adhesive Activator	40143536	A/R			
19	Compression spring	20185501	4			
20	Nyliner	06754700	4			
21	Retaining ring	H0933100	8			
22	Platen stud	20422101	4			
23	Frame weldment assy.	20120801				

NOTICE: THIS CONTAINS CONFIDENTIAL PROPRIETARY AND NON-PUBLIC INFORMATION OF ITEK GRAPHIX CORP. DUPLICATION OR REPRODUCTION (IN WHOLE OR IN PART) OR DISCLOSURE HEREOF TO UNAUTHORIZED PERSONS WITHOUT THE PRIOR WRITTEN CONSENT OF ITEK GRAPHIX CORP. GRAPHIC SYSTEMS DIVISION IS PROHIBITED.

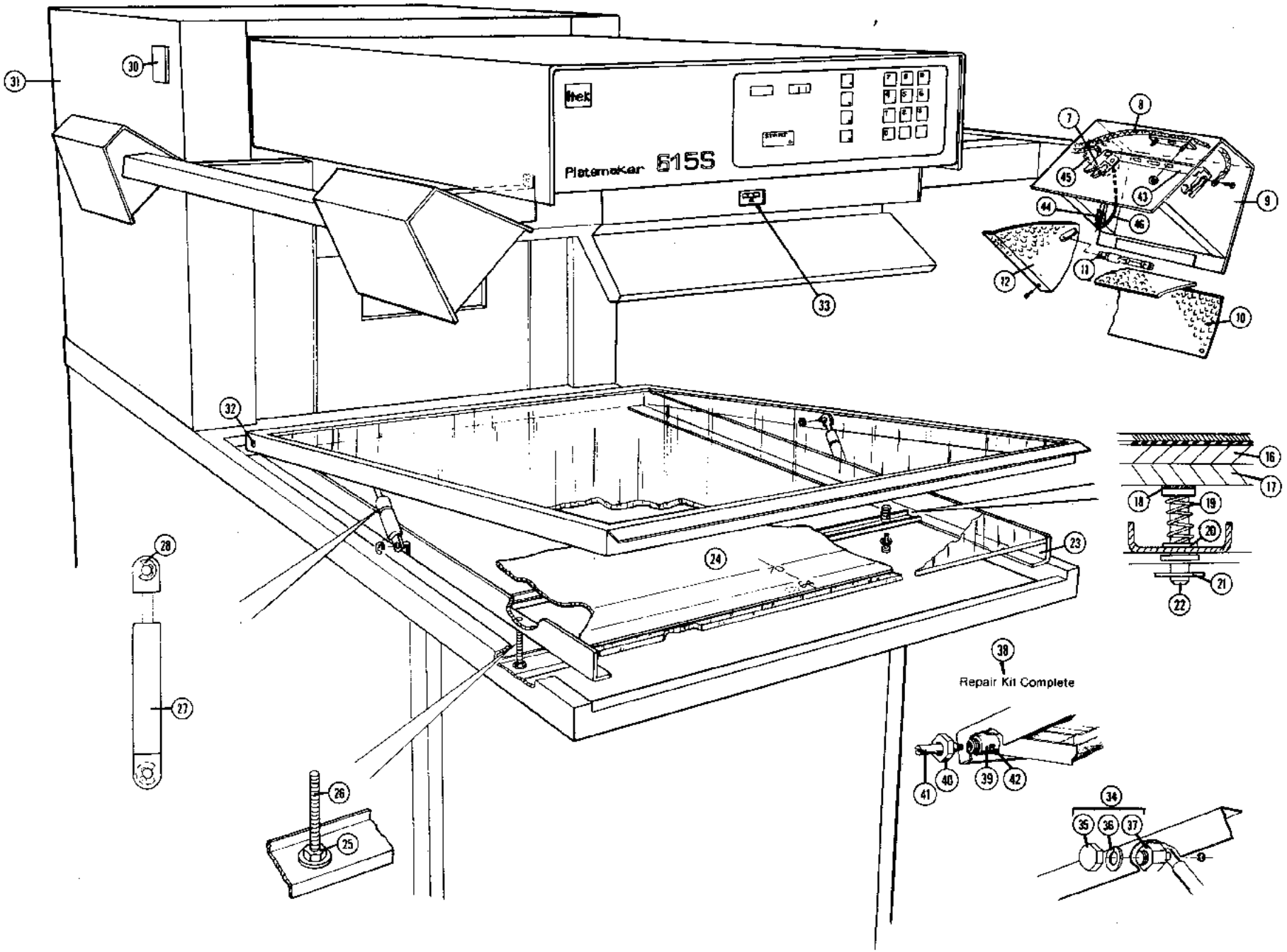

NOTICE: THIS CONTAINS CONFIDENTIAL, PROPRIETARY AND NON-PUBLIC INFORMATION OF ITEK GRAPHIX CORP. DUPLICATION OR REPRODUCTION (IN WHOLE OR IN PART) OR DISCLOSURE HEREOF TO UNAUTHORIZED PERSONS WITHOUT THE PRIOR WRITTEN CONSENT OF ITEK GRAPHIX CORP. GRAPHIC SYSTEMS DIVISION IS PROHIBITED.

MOVABLE LAMP ARMS KIT - 20247401

COPYBOARD ASSEMBLY - 20121101

REF.	DESCRIPTION	PART NO.	QTY.	AFTER S/N	USE P/N	COMMENTS
24	Chart (English/Metric)	20126901				
25	Nut, ¼-20	H0124200	8			
26	Stud	H0484700	4			
27	Counter balance	20143401	2			
28	Retaining ring	H0933100	8			
30	Logo	19641701				
31	Side cover (hinge side)	20070701				
	Door weld. assy. (rear)	20128701				
	Magnet, latch	08974200	2			
32	Hinge pin	20153401	2			
	Set screw (hinge)	H0113400				
	Nyliner (hinge)	06754703	2			
33	Counter	20272501	2			
	Copyboard assy. complete (includes items 16 - 23)	20121101				
34	Stud repair kit complete	20431501	A/R			
35	Nut, 10-32 cap	H0141000	A/R			
36	Lock washer, #10	H0155200	A/R			
37	Pivot stud	20431601	A/R			
38	Hinge repair kit complete	20447001	A/R			
39	Bearing	20446801	A/R			
40	Nut	H0127200	A/R			
41	Hinge pin	20446901	A/R			
42	Set screw	H0076400	A/R			
43	Lamp bracket		4	1349	20325801	
44	Bracket, fastener		16	1349	20355801	
45	Clamp plate		4	1349	20358301	
46	Wire assy. (ground)		4	1349	20251801	

NOTICE: THIS CONTAINS CONFIDENTIAL PROPRIETARY AND NON-PUBLIC INFORMATION OF ITEM GRAPHIX CORP. DUPLICATION OR REPRODUCTION IN WHOLE OR IN PART OR DISCLOSURE HEREOF TO UNAUTHORIZED PERSONS WITHOUT THE PRIOR WRITTEN CONSENT OF ITEM GRAPHIX CORP. GRAPHIC SYSTEMS DIVISION IS PROHIBITED.

7A MOVABLE LAMP ASSEMBLY

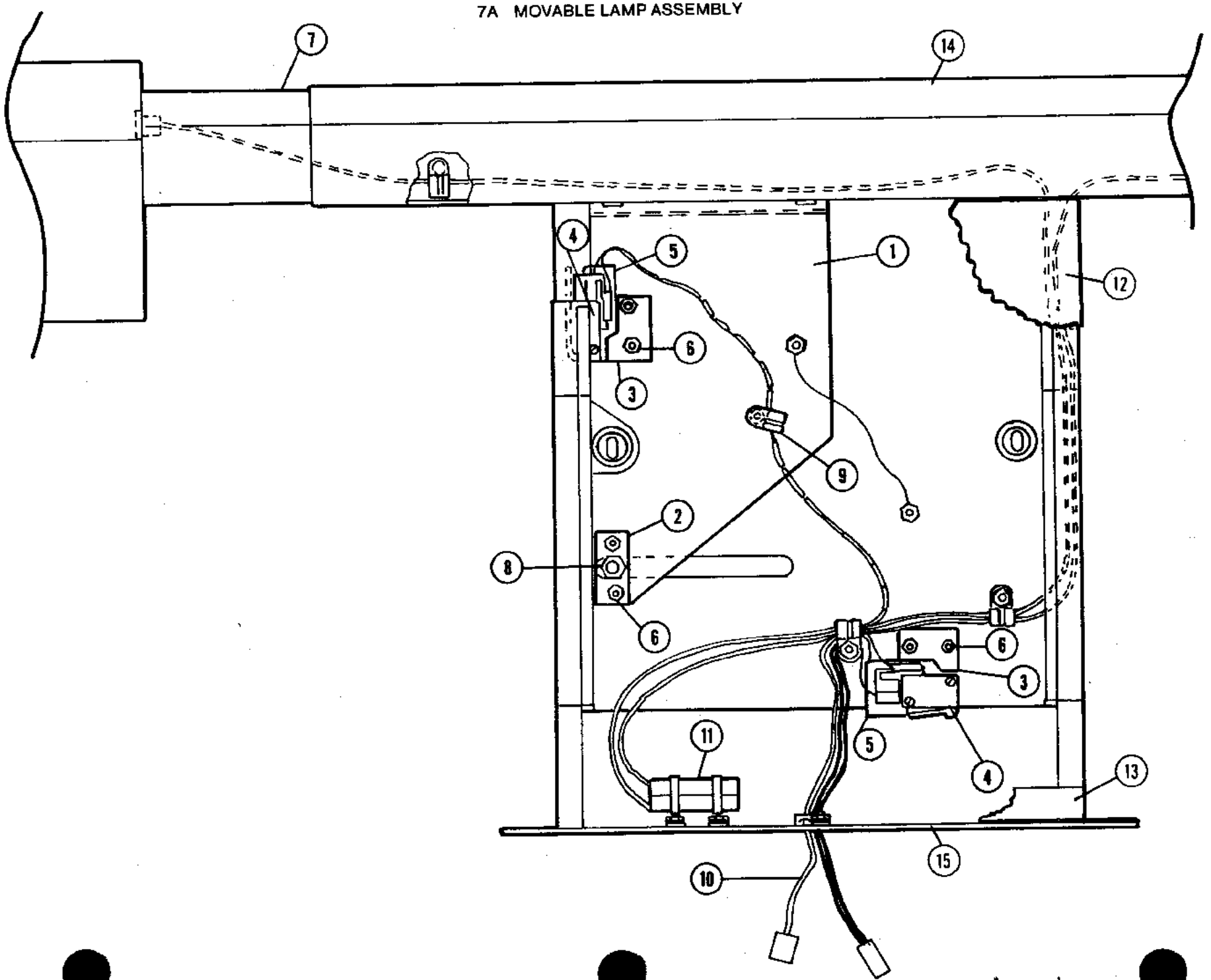

NOTICE: THIS CONTAINS CONFIDENTIAL, PROPRIETARY AND NON-PUBLIC INFORMATION OF ITEK GRAPHIX CORP. DUPLICATION OR REPRODUCTION (IN WHOLE OR IN PART) OR DISCLOSURE HEREOF TO UNAUTHORIZED PERSONS WITHOUT THE PRIOR WRITTEN CONSENT OF ITEK GRAPHIX CORP. GRAPHIC SYSTEMS DIVISION IS PROHIBITED.

MOVABLE LAMP ASSEMBLE KIT – 20247401

REF.	DESCRIPTION	PART NO.	QTY.	AFTER S/N	USE P/N	COMMENTS
1	H.S. tie plate	20277901		1349	20402701	
NS	L.S. tie plate (right hand lamp bank)	20277801		1349	20402601	
2	Nut plate	20277601				
3	Switch bracket	19279501				
4	Switch	19057401				
5	Insulator	01094600				
6	Nut	H0144200				
7	H.S. front lamp arm	20244901		1349	20402301	
NS	L.S. front lamp arm (right hand lamp bank)	20245101		1349	20402001	
8	Jam nut	H0145400				
9	Wire clamp	09779700				
10	Lamp switch harness	20277101				
11	Commoning block	19166701				
12	Cover	20283301		1349	20447301	
13	Inner angle	20283401		1349	20447101	
14	Lamp arm weld. (H.S.)			1349	20402201	
	Lamp arm weld. (L.S.)			1349	20402101	
15	Mounting plate (H.S.)			1349	20401901	
	Mounting plate (L.S.)			1349	20401801	

NOTICE: THIS CONTAINS CONFIDENTIAL, PROPRIETARY AND NON-PUBLIC INFORMATION OF ITEK GRAPHIX CORP. DUPLICATION OR REPRODUCTION IN WHOLE OR IN PART OR DISCLOSURE HEREOF TO UNAUTHORIZED PERSONS WITHOUT THE PRIOR WRITTEN CONSENT OF ITEK GRAPHIX CORP. GRAPHIC SYSTEMS DIVISION IS PROHIBITED.

7C MOVEABLE LAMP (Side View)

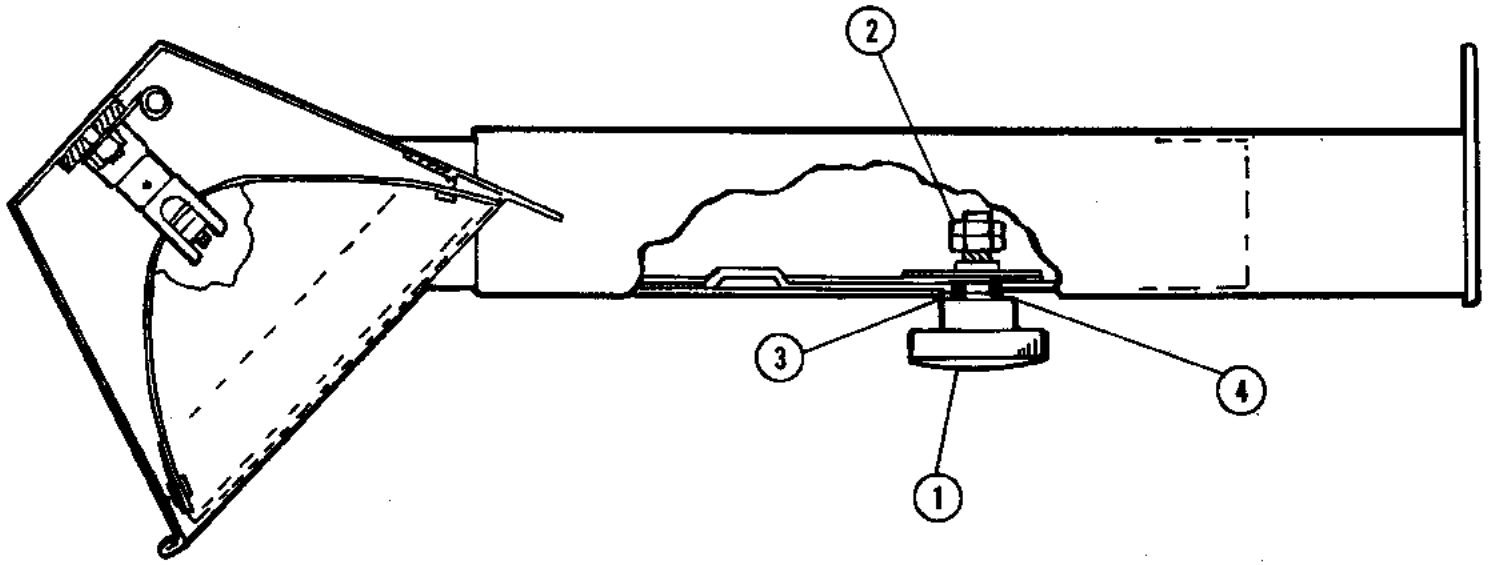

64 - 79% Lamps out

80 - 105% Lamps in

NOTICE: THIS CONTAINS CONFIDENTIAL, PROPRIETARY AND NON-PUBLIC INFORMATION OF ITEK GRAPHIX CORP. DUPLICATION OR REPRODUCTION IN WHOLE OR IN PART OR DISCLOSURE HEREOF TO UNAUTHORIZED PERSONS WITHOUT THE PRIOR WRITTEN CONSENT OF ITEK GRAPHIX CORP. GRAPHIC SYSTEMS DIVISION IS PROHIBITED.

MOVEABLE LAMP ASSEMBLY

REF.	DESCRIPTION	PART NO.	QTY.	AFTER S/N	USE P/N	COMMENTS
1	Knob	20287001				
2	Jam nut	H0145400				
3	Plastic washer	40152481				
4	Bushing	20277701				

NOTICE: THIS CONTAINS CONFIDENTIAL, PROPRIETARY AND NON-PUBLIC INFORMATION OF ITEK GRAPHIX CORP. DUPLICATION OR REPRODUCTION IN WHOLE OR IN PART OR DISCLOSURE HEREOF TO UNAUTHORIZED PERSONS WITHOUT THE PRIOR WRITTEN CONSENT OF ITEK GRAPHIX CORP. GRAPHIC SYSTEMS DIVISION IS PROHIBITED.

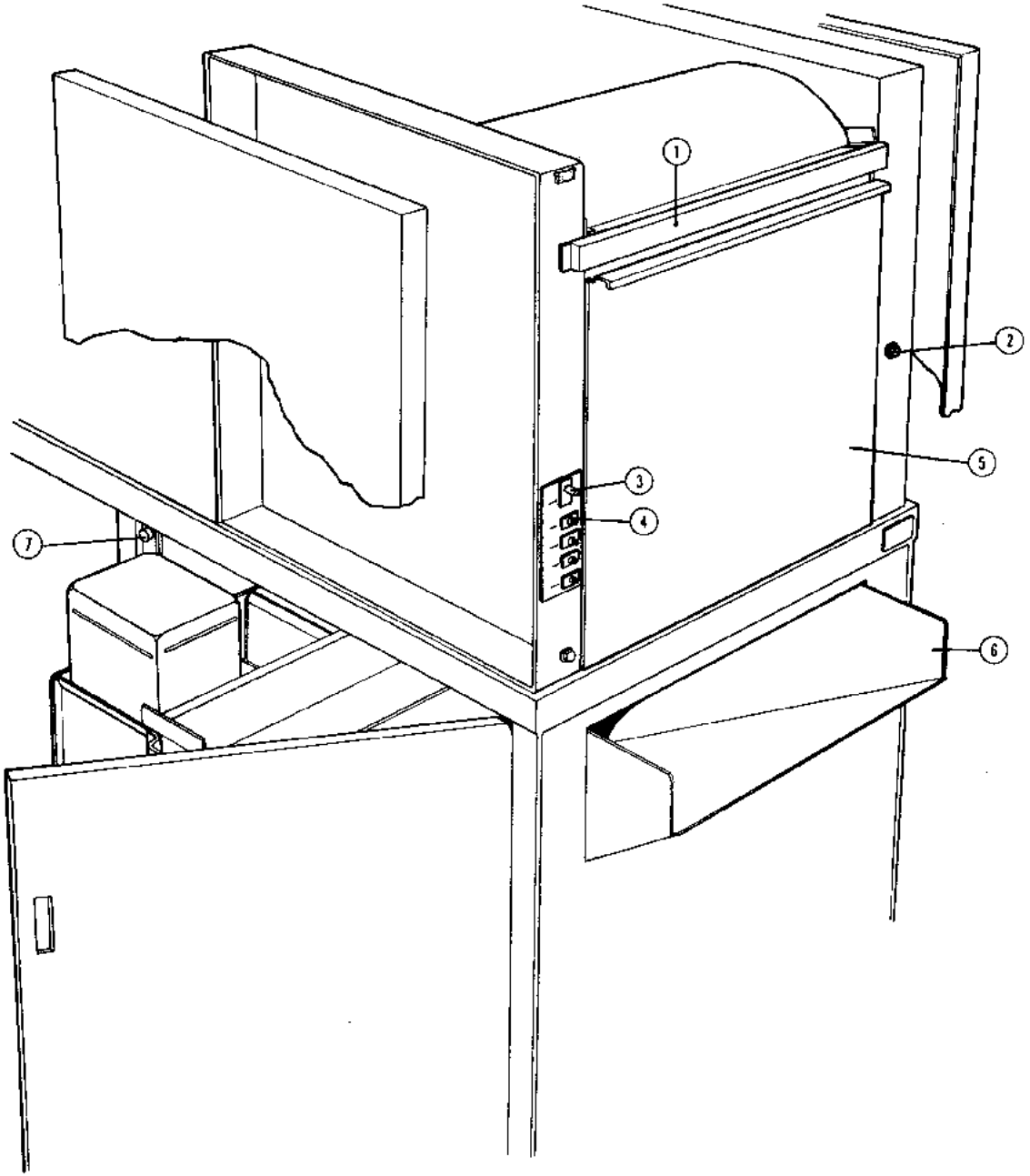

NOTICE: THIS CONTAINS CONFIDENTIAL, PROPRIETARY AND NON-PUBLIC INFORMATION OF ITEK GRAPHIX CORP. DUPLICATION OR REPRODUCTION (IN WHOLE OR IN PART) OR DISCLOSURE HEREOF TO UNAUTHORIZED PERSONS WITHOUT THE PRIOR WRITTEN CONSENT OF ITEK GRAPHIX CORP. GRAPHIC SYSTEMS DIVISION IS PROHIBITED.

REAR VIEW

REF.	DESCRIPTION	PART NO.	QTY.	AFTER S/N	USE P/N	COMMENTS
1	Knife guard	20499701				
2	Pre-feed switch	09072601				
3	Cut switch	20128501				
4	Circuit breaker	40121703	4			
5	Light seal (door only)	20175501				
	⅜" Foam Tape	40151376				
	¾" Foam Tape	40151336				
6	Delivery chute	20009001				
7	Door interlock SW	19253001				
NS	Switch cover	20264201				
NS	Tape on light seal	40151373				
NS	Light Seal Kit	90063001				

For Complete door Assembly Order:

Door Only	20175501
Foam Tape	40151336
Tape on Seal	CL845100
Latch Hook L.S.	20391901
Latch Hook H.S.	20391801
Nut	H0144200
Washer	H0155100

Revised 7/86

NOTICE: THIS CONTAINS CONFIDENTIAL PROPRIETARY AND NON-PUBLIC INFORMATION OF ITOH GRAPHIX CORP. DUPLICATION OR REPRODUCTION IN WHOLE OR IN PART OR DISCLOSURE HEREOF TO UNAUTHORIZED PERSONS WITHOUT THE PRIOR WRITTEN CONSENT OF ITOH GRAPHIX CORP. GRAPHIC SYSTEMS DIVISION IS PROHIBITED.

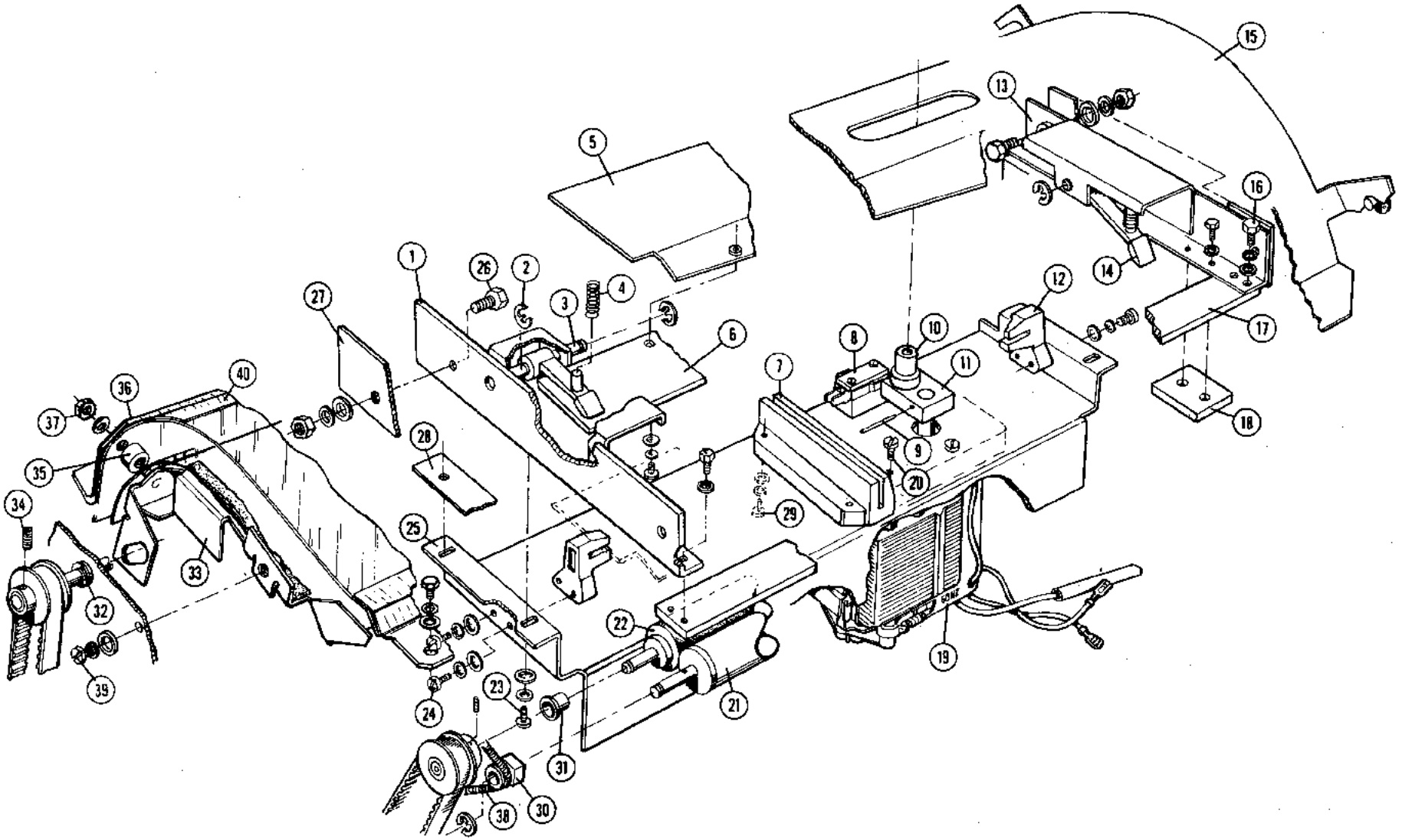

NOTICE: THIS CONTAINS CONFIDENTIAL, PROPRIETARY AND NON-PUBLIC INFORMATION OF FITEK GRAPHIX CORP. DUPLICATION OR REPRODUCTION (IN WHOLE OR IN PART) OR DISCLOSURE HEREOF TO UNAUTHORIZED PERSONS WITHOUT THE PRIOR WRITTEN CONSENT OF FITEK GRAPHIX CORP. GRAPHIC SYSTEMS DIVISION IS PROHIBITED.

KNIFE ASSEMBLY 20094701

DOES NOT INCLUDE ITEMS # 15, 21, 22, 26, 27, 33, 36

REF.	DESCRIPTION	PART NO.	QTY.	AFTER S/N	USE P/N	COMMENTS
1	Left support assy.	20160401				
2	Retaining ring	H0933100	4			
NS	Pin	19578201	1			
3	Pin	19578201	1			
4	Spring	09318900	2			
5	Plate assy.	20073901				
6	Moveable knife	20074301				
7	Guide block	20241001				
NS	Nut Plate	20547101				
8	Switch	01035702				
	Spacer	19440701				
	Machine screw 4-40 x ¾"	H0584100	2			
	Nut plate	08949300	1			
9	Spirol pin	H0509100				
10	Roller	20191401				
11	Pivot plate assy.	20074601				
12	Guide block	19594401	2			
13	Right support assy.	20160301				
14	Spring block	19594601	2			
15	Upper paper guide assy.	20156601				
NS	Lower paper guide assy.	20156701				
NS	Upper cage liner	20156401				
16	Machine screw 10-32 x ⅜"	H0480000	6			
	Flat washer	H0156000	6			
	Lock washer	H0155200	6			
17	Stationary knife	20073801				
18	Pad	19551601				
19	Knife motor	20475701				
20	Machine screw 8-32	H0472100	10			
	Flat washer	H0156300				
	Lock washer	H0155100				

NOTICE: THIS CONTAINS CONFIDENTIAL, PROPRIETARY AND NON-PUBLIC INFORMATION OF ITEK GRAPHIX CORP. DUPLICATION OR REPRODUCTION IN WHOLE OR IN PART OR DISCLOSURE HEREOF TO UNAUTHORIZED PERSONS WITHOUT THE PRIOR WRITTEN CONSENT OF ITEK GRAPHIX CORP. GRAPHIC SYSTEMS DIVISION IS PROHIBITED.

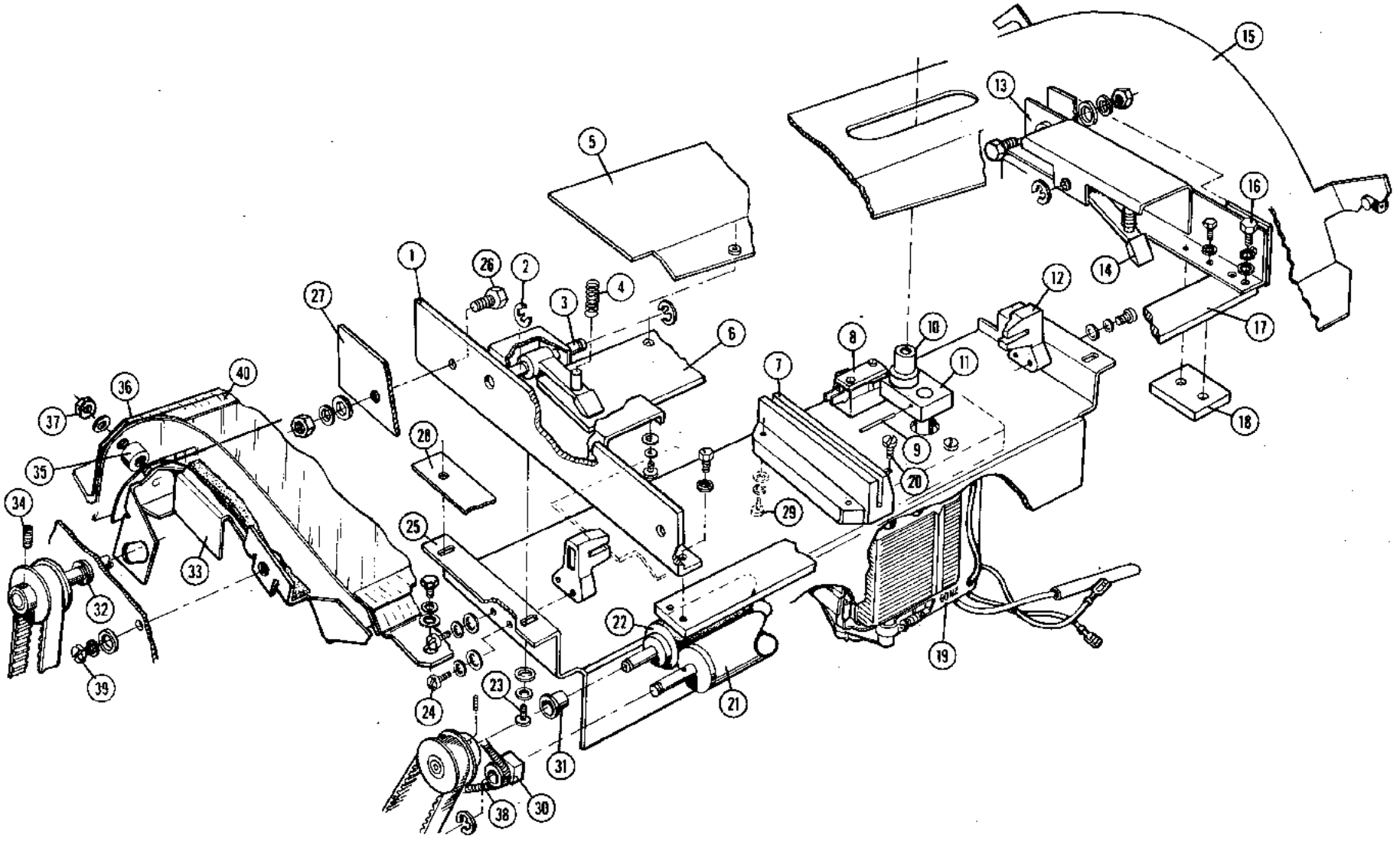

NOTICE: THIS CONTAINS CONFIDENTIAL, PROPRIETARY AND NON-PUBLIC INFORMATION OF ITEK GRAPHIX CORP. DUPLICATION OR REPRODUCTION (IN WHOLE OR IN PART) OR DISCLOSURE THEREOF TO UNAUTHORIZED PERSONS WITHOUT THE PRIOR WRITTEN CONSENT OF ITEK GRAPHIX CORP. GRAPHIC SYSTEMS DIVISION IS PROHIBITED.

KNIFE ASSEMBLY 20094701

DOES NOT INCLUDE ITEMS # 15, 21, 22, 26, 27, 33, 36

REF.	DESCRIPTION	PART NO.	QTY.	AFTER S/N	USE P/N	COMMENTS
21	Back up roller assy.	20376901				
22	Paper drive roller	20083801				
23	Machine screw	H0029600	4			
	washer (insulator) .093"	20161401	4		20472101	.164"
	Lock washer	H0155100	4			
24	Machine screw 8-32 x 7/16"	H0029600	10			
	Flat washer	H0156300	10			
	Lock washer	H0155100	10			
25	Motor bracket	20094602				
26	Machine screw ¼-20 x ¾	H0059300	4			
	Flat washer, ¼	H0190100	8			
	Lock washer, ¼	H0155300	4			
	Shoulder washer (insulator)	20161301	8			
	Nut, ¼ - 20	H0144300	4			
NS	Knife guard assy.	20499701				
27	Knife insulator	20160601				
NS	Knife insulator	20160701				
28	Knife insulator	20160801				
29	Screw	H0472300	2			
	Lock washer, #8	H0155100	2			
30	Bearing	01371601	2			
31	Bearing	09258021	2			
32	Bearing	20177901	2			
* 33	Lower paper guide	20303101				
34	Set screw	H0113400				
35	Spacer	40150177	2			
* 36	Top guide assembly	20302301				
37	Nut	H0144400	2			
	Washer, lock	H0155200	2			
	Washer, flat	H0156000	2			
38	Spring	20177701	2			
39	Bolt ¼-20	H0065800	2			
	Washer, lock	H0155300	2			
	Washer, flat	H0156200	2			
40	Tape, 2" wide	40151357	16"			
*	Upper & Lower guide assembled as one	20251001				

Revised 7/86

NOTICE: THIS CONTAINS CONFIDENTIAL, PROPRIETARY AND NON-PUBLIC INFORMATION OF ITEK GRAPHIX CORP. DUPLICATION OR REPRODUCTION IN WHOLE OR IN PART OR DISCLOSURE HEREOF TO UNAUTHORIZED PERSONS WITHOUT THE PRIOR WRITTEN CONSENT OF ITEK GRAPHIX CORP. GRAPHIC SYSTEMS DIVISION IS PROHIBITED.

LENS CARRIER ASSEMBLY

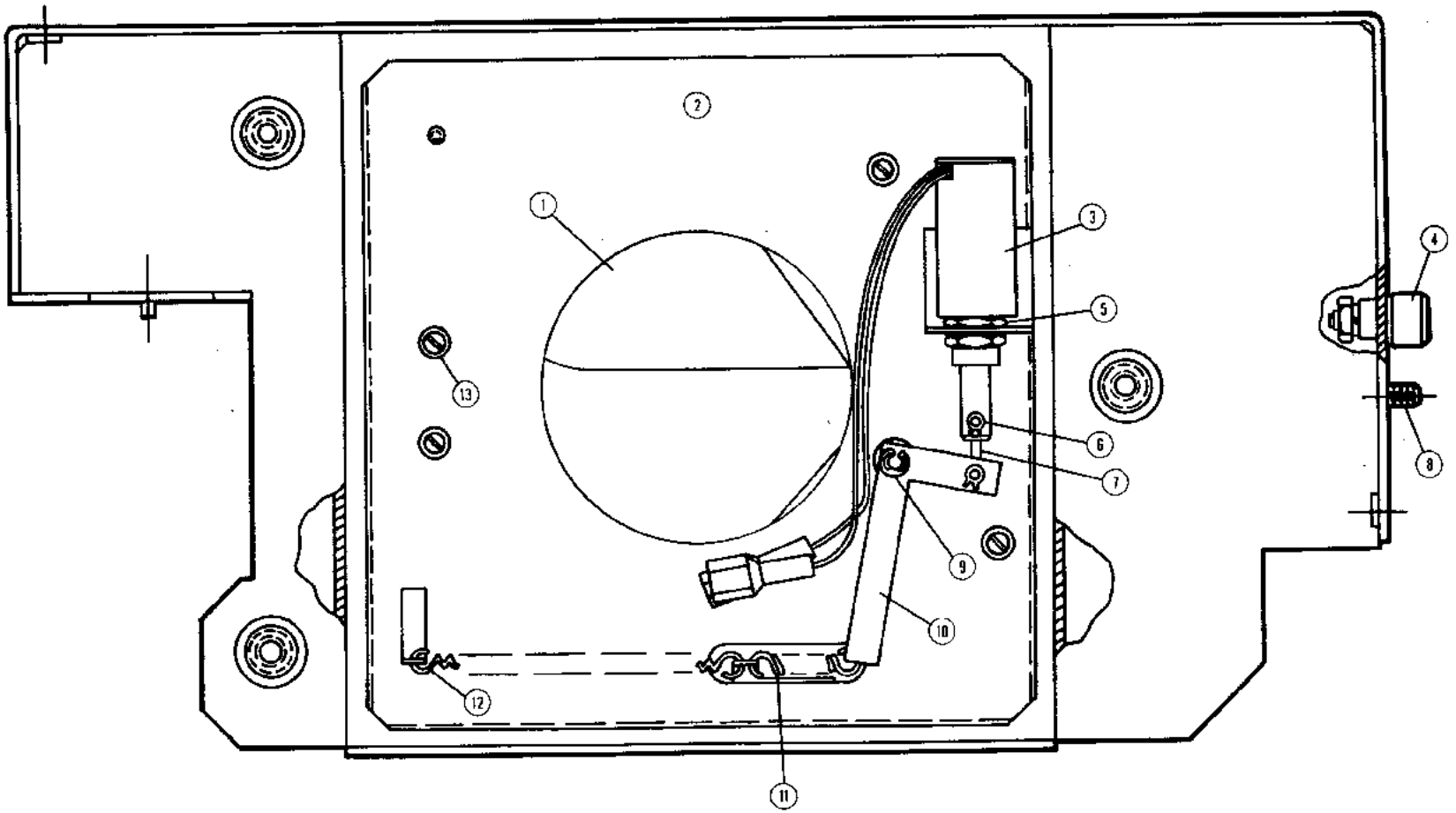

NOTICE: THIS CONTAINS CONFIDENTIAL, PROPRIETARY AND "NON-PUBLIC" INFORMATION OF ITEK GRAPHIX CORP. DUPLICATION OR REPRODUCTION IN WHOLE OR IN PART OR DISCLOSURE HEREOF TO UNAUTHORIZED PERSONS WITHOUT THE PRIOR WRITTEN CONSENT OF ITEK GRAPHIX CORP. GRAPHIC SYSTEMS DIVISION IS PROHIBITED.

LENS CARRIER ASSEMBLY 20135201

REF.	DESCRIPTION	PART NO.	QTY.	AFTER S/N	USE P/N	COMMENTS
1	Shutter assy.	19633301				
2	Shutter plate weld. assy.	20100101				
3	Solenoid assy.	20135101				
4	Cam follower	09352900				
	Spacer	03658700				
	Lock washer	H0155200				
	Hex nut	H0144400				
5	Hex nut	H0136100				
6	Retaining ring	H0930700	2			
7	Link	19862801				
8	Cap screw	H0273200				
9	Retaining ring	H0932900				
10	Shutter link	19255801				
11	Spring extension	19255401				
12	Spring extension	19255501				
13	Machine screw 4-40 x ¼"	H0586100	4			
	Lock washer	H0155700	4			

NOTICE: THIS CONTAINS CONFIDENTIAL PROPRIETARY AND NON-PUBLIC INFORMATION OF FITCH GRAPHIX CORP. DUPLICATION OR REPRODUCTION IN WHOLE OR IN PART OR DISCLOSURE HEREOF TO UNAUTHORIZED PERSONS WITHOUT THE PRIOR WRITTEN CONSENT OF FITCH GRAPHIX CORP. GRAPHIC SYSTEMS DIVISION IS PROHIBITED.

OPTICS ASSEMBLY

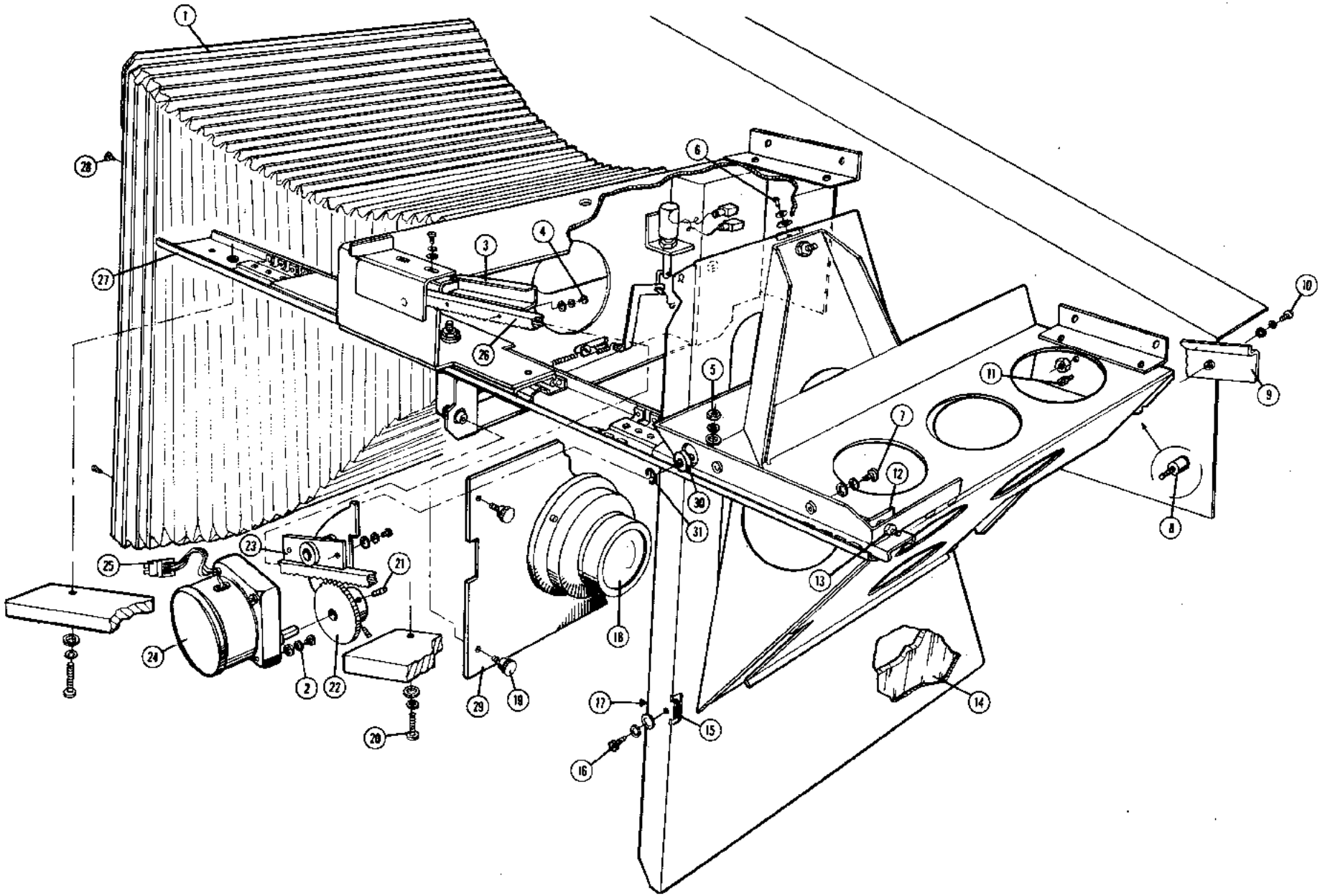

NOTICE: THIS CONTAINS CONFIDENTIAL, PROPRIETARY AND NON-PUBLIC INFORMATION OF ITEK GRAPHIX CORP. DUPLICATION OR REPRODUCTION IN WHOLE OR IN PART OR DISCLOSURE HEREOF TO UNAUTHORIZED PERSONS WITHOUT THE PRIOR WRITTEN CONSENT OF ITEK GRAPHIX CORP. GRAPHIC SYSTEMS DIVISION IS PROHIBITED.

OPTICS ASSEMBLY

REF.	DESCRIPTION	PART NO.	QTY.	AFTER S/N	USE P/N	COMMENTS
1	Bellows assy.	20113002				
2	Machine screw 8-32 x ⅜"	H0472100				
	Flat washer	H0156300				
	Lock washer	H0155100				
3	Switch actuator, 100%	20110001				
4	Machine screw 8-32 x ¼"	H0471900				
	Lock washer	H0155200				
	Flat washer	H0156300				
5	Hex nut 10-32	H0144400				
	Flat washer	H0156200				
	Lock washer	H0155200				
6	Machine screw 8-32 x ¼"	H0471900				
	Lock washer	H0155100				
	Flat washer	H0156300				
7	Machine screw 10-32 x ⅜"	H0465400				
	Lock washer	H0155200				
	Flat washer	H0190200				
8	Cam follower	09352900				
	Spacer	03658700				
	Lock washer	H0155200				
	Hex nut 10-32	H0144400				
9	Guide rail assy.	20112102				
10	Machine screw 10-32 x ⅜"	H0465400				
	Lock washer	H0155200				
	Flat washer	H0156200				
11	Cap screw 10-32 x ⅜"	H0273200				
12	Cam follower bracket assy.	20192101				
13	Hex nut 10-32	H0144400				

NOTICE: THIS CONTAINS CONFIDENTIAL PROPRIETARY AND NON-PUBLIC INFORMATION OF ITEK GRAPHIX CORP. DUPLICATION OR REPRODUCTION IN WHOLE OR IN PART OR DISCLOSURE HEREOF TO ANY UNAUTHORIZED PERSONS WITHOUT THE PRIOR WRITTEN CONSENT OF ITEK GRAPHIX CORP. GRAPHIC SYSTEMS DIVISION IS PROHIBITED.

OPTICS ASSEMBLY

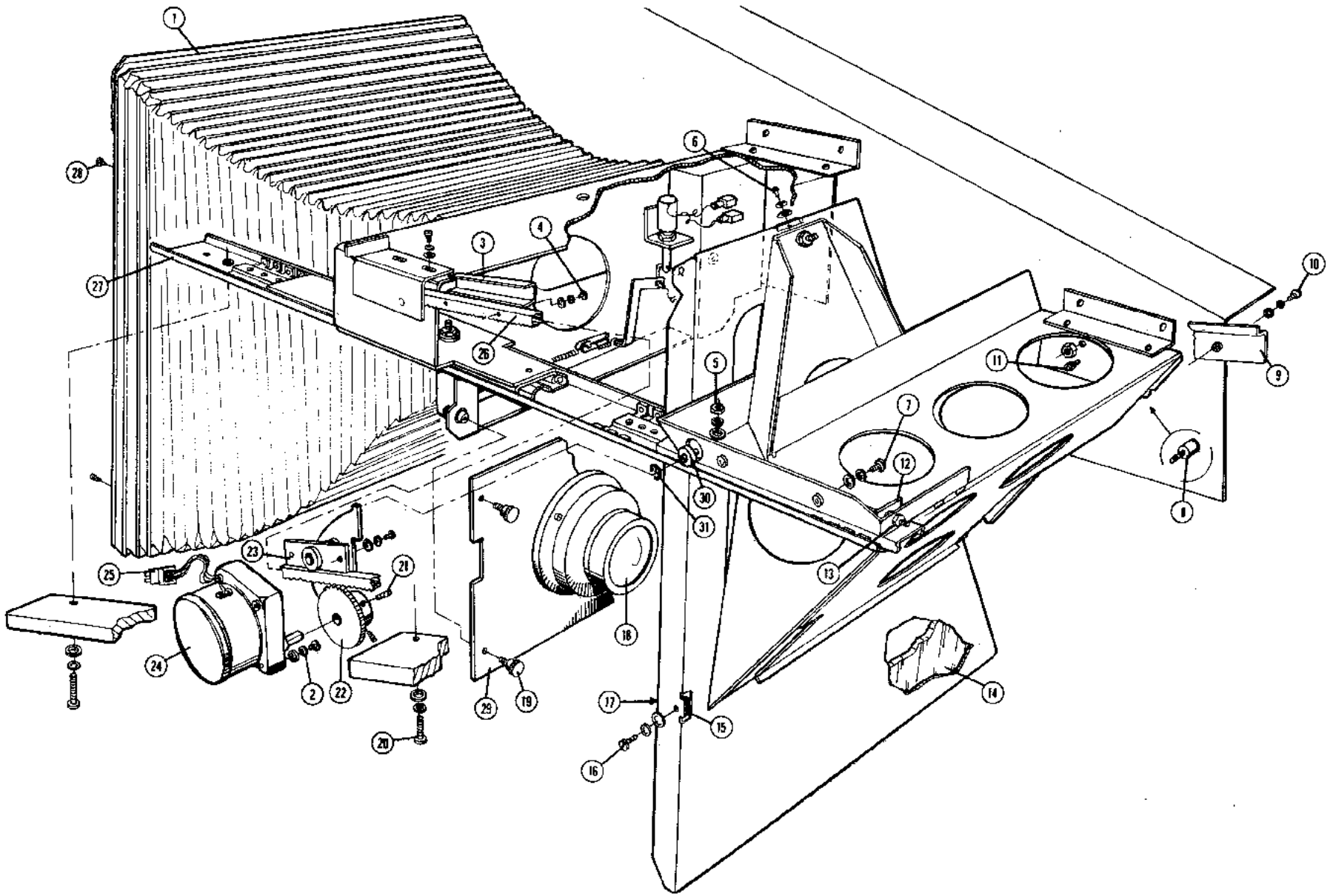

NOTICE: THIS CONTAINS CONFIDENTIAL PROPRIETARY AND NON-PUBLIC INFORMATION OF ITEK GRAPHIX CORP. DUPLICATION OR REPRODUCTION (IN WHOLE OR IN PART) OR DISCLOSURE HEREOF TO UNAUTHORIZED PERSONS WITHOUT THE PRIOR WRITTEN CONSENT OF ITEK GRAPHIX CORP. GRAPHIC SYSTEMS DIVISION IS PROHIBITED.

OPTICS ASSEMBLY

REF.	DESCRIPTION	PART NO.	QTY.	AFTER S/N	USE P/N	COMMENTS
14	Mirror	20094401				
15	Tape (cork pad)	PL841900				
16	Machine screw 8-32 x ¼"	H0471900				
	Lock washer	H0155100				
	Flat washer	H0156300				
17	Mirror clip assy.	20118301				
18	Lens	20517302				
19	Allen screw	H0320800				
20	Machine screw 10-32 x 1"	H0065700				
	Lock washer	H0155200				
	Flat washer	H0156200				
21	Set screw 10-32 x ⅜"	H0116400				
22	Mirror cam assy.	20110301				
23	Hold down assy.	20109701				
24	Stepper motor assy.	20093301				
25	Connector - plug	40132905				
26	Gear rack	20083101				
27	Ball slide assy.	20110101				
28	Machine screw 6-32 x ¼"	H0470100				
NS	Transmissive sensor	20065201				
29	Lens plate	20384901				
30	Bushing	09258004				
31	E-Ring	H0927200				

NOTICE: THIS CONTAINS CONFIDENTIAL PROPRIETARY AND NON-PUBLIC INFORMATION OF ITEK GRAPHIX CORP. DUPLICATION OR REPRODUCTION (IN WHOLE OR IN PART) OR DISCLOSURE HEREOF TO UNAUTHORIZED PERSONS WITHOUT THE PRIOR WRITTEN CONSENT OF ITEK GRAPHIX CORP. GRAPHIC SYSTEMS DIVISION IS PROHIBITED.

FOCAL PLANE ASSEMBLY

19A

Serial No 1054 and above

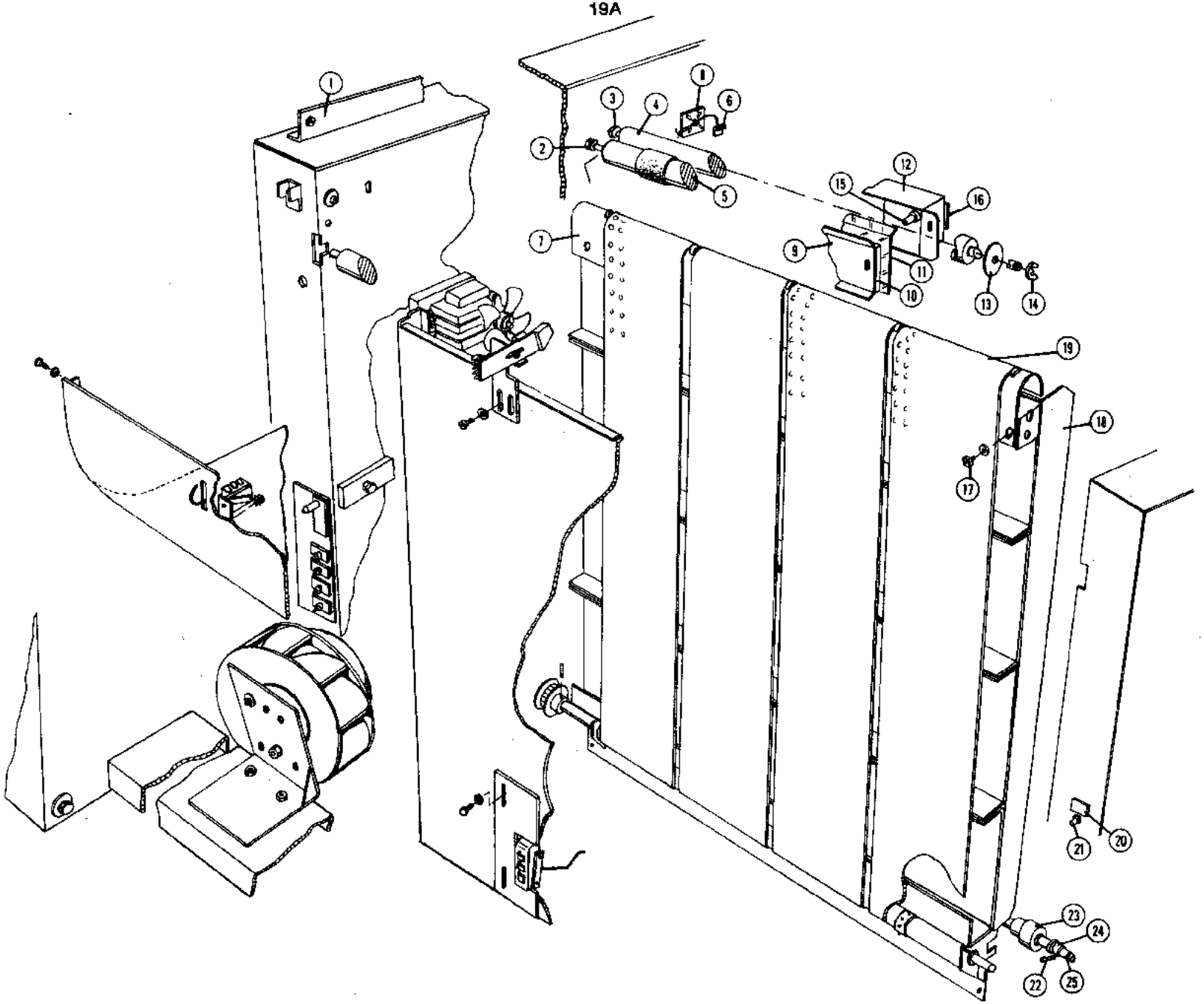

NOTICE: THIS CONTAINS CONFIDENTIAL, PROPRIETARY AND NON-PUBLIC INFORMATION OF ITEK GRAPHIX CORP. DUPLICATION OR REPRODUCTION IN WHOLE OR IN PART OR DISCLOSURE HEREOF TO UNAUTHORIZED PERSONS WITHOUT THE PRIOR WRITTEN CONSENT OF ITEK GRAPHIX CORP. GRAPHIC SYSTEMS DIVISION IS PROHIBITED.

FOCAL PLANE

REF.	DESCRIPTION	PART NO.	QTY.
1	Angle bracket	20047101	1
2	Bearing	20177901	2
3	Bearing	01371601	2
4	Input roller	20311701	1
5	Input roller	20083001	1
6	Fogger harness	20256501	1
7	Platen, guide	20318601	1
8	Cable base	19480101	A/R
	Cable tie	E0230700	A/R
9	Guide	20173801	1
10	Spacer	20279501	2
11	Guide, clear	20391601	1
12	Fogger (including sensor lamp assy.)	20254901	1
13	Washer, plastic	40152478	2

REF.	DESCRIPTION	PART NO.	QTY.
14	"E-Ring"	H0933100	2
15	Lamp	19214301	5
16	Fogger PCB	20241301	1
17	Screw, 10-32 x ⅜	H0465400	2
	Lock washer, #10	H0155200	2
	Flat washer, #10	H0156000	2
18	Platen assembly complete	20342102	1
19	Belt	20503101	4
20	Label	20142601	1
21	Switch	20355301	1
22	Spring	09572400	2
23	Roller	20157901	2
24	Bearing	01371601	2
25	Platen Roller assy comp	20319801	1
	Shaft only	20319101	1
	E-Ring	H0933100	2
	Pin, 3/25 x ⅝	H0507700	2

NOTICE: THIS CONTAINS CONFIDENTIAL, PROPRIETARY AND NON-PUBLIC INFORMATION OF ITEK GRAPHIX CORP. DUPLICATION OR REPRODUCTION IN WHOLE OR IN PART OR DISCLOSURE THEREOF TO UNAUTHORIZED PERSONS WITHOUT THE PRIOR WRITTEN CONSENT OF ITEK GRAPHIX CORP. GRAPHIC SYSTEMS DIVISION IS PROHIBITED.

FOCAL PLANE ASSEMBLY

19C

Serial No 1054 and above

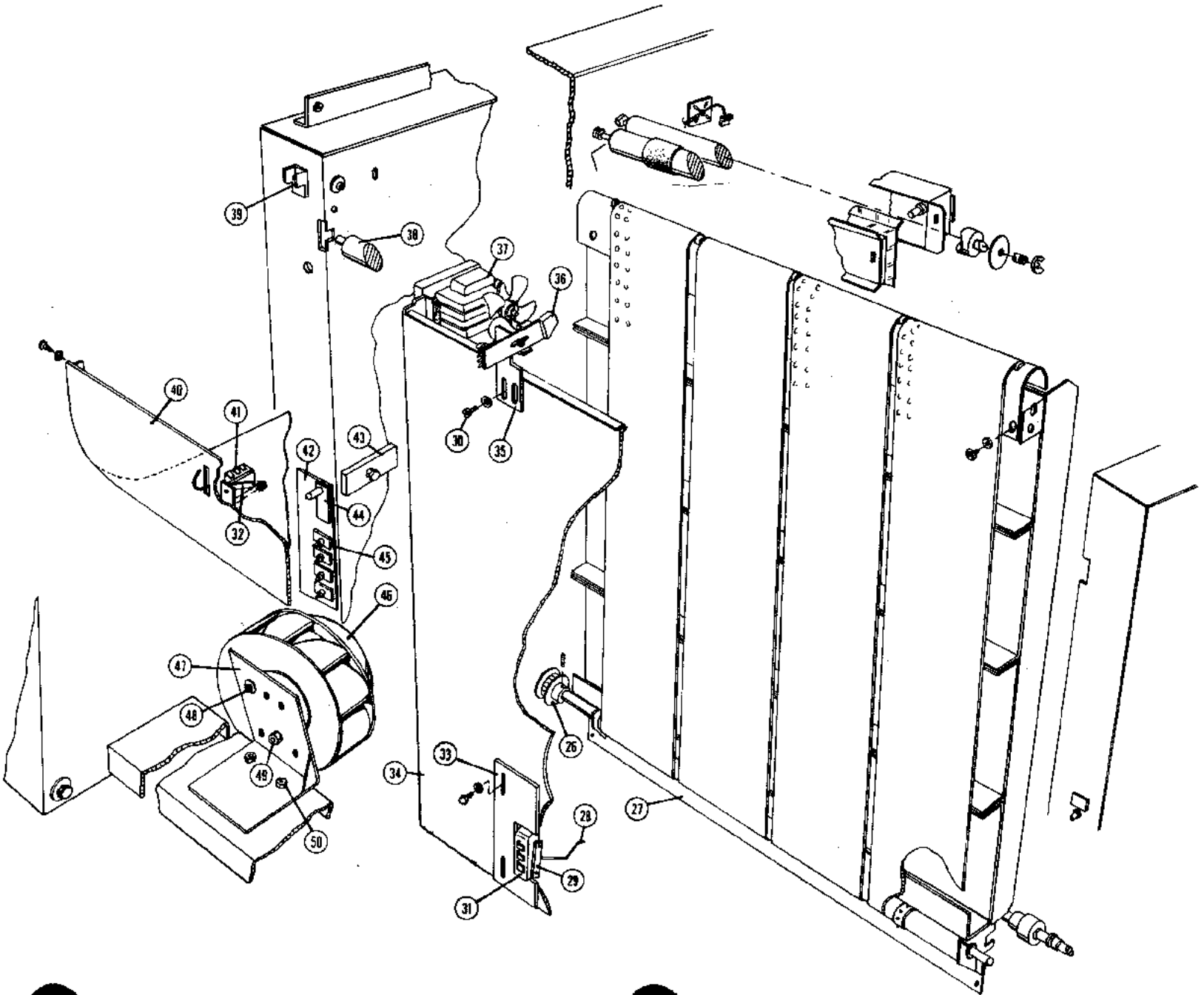

NOTICE: THIS CONTAINS CONFIDENTIAL, PROPRIETARY AND NON-PUBLIC INFORMATION OF ITEK GRAPHIX CORP. DUPLICATION OR REPRODUCTION (IN WHOLE OR IN PART) OR DISCLOSURE HEREOF TO UNAUTHORIZED PERSONS WITHOUT THE PRIOR WRITTEN CONSENT OF ITEK GRAPHIX CORP. GRAPHIC SYSTEMS DIVISION IS PROHIBITED.

FOCAL PLANE

REF.	DESCRIPTION	PART NO.	QTY.
26	Pulley	20247601	1
	Pin, 3/32 x ⅝	H0507700	1
27	Input guide	20319201	1
	Nut, 6-32	H0144100	2
	Lock washer, #6	H0155000	2
	Flat washer, #6	H0156400	2
28	Actuator	20150001	1
	Sleeving	E0189000	1
29	Nut plate	08949300	1
30	Screw, 10-32 x ⅜	H0472100	2
	Flat washer, #10	H0156000	2
	Lock washer, #10	H0155200	2
31	Switch	19285001	1
	Screw, 4-40 x ¾	H0584100	2
	Lock washer, #4	H0155700	2
	Flat washer, #4	H0156500	2
32	Screw, 4-40 x ¾	H0584100	2
	Lock washer, #4	H0155700	2
	Nut, 6-32	H0144100	2
33	End sense switch assy comp	20293101	1
34	Vacuum back weldment	20341501	1
35	Transmissive sensor bracket	20127201	1
	Screw, 10-32 x ⅜	H0472100	2
	Lock washer, #10	H0155200	2
	Flat washer, #10	H0156000	2
36	Sensor PCB ass. 6 Wire plug	20505001	1
	Sensor PCB ass. 4 Wire plug	20378501	1
	Screw, 4-40 x 5/16	H0585200	1
	Nut, 4-40	H0144500	1
37	Motor, wind	09096201	1

REF.	DESCRIPTION	PART NO.	QTY.
38	Roller, metal	20376901	1
	Roller, rubber drive	20083801	1
39	Switch, interlock	20286901	1
	Cheater, switch	20323301	A/R
40	Upper paper guide assy comp	20156201	1
	Screw, 10-32 x ⅜	H0472100	4
	Lock washer, #10	H0155200	4
41	Switch	19285001	1
	Switch bracket	20106901	1
	Actuator	40140302	1
42	Label	20202401	1
43	Paper roll bearing	20292301	4
	Screw, 8-32 x ⅝	H0472300	4
	Flat washer, #8	H0156300	4
	Lock washer, #8	H0155100	4
44	Switch, push button	20128501	1
45	Circuit breaker	40121703	4
46	Vacuum blower assembly	20093401	2
47	Blower mount	20130301	1
	Blower plate	20130401	1
48	Screw, "metric"	H0725000	8
	Flat washer, #8	H0156300	8
	Lock washer, #8	H0155100	8
49	Nut, ¼-20	H0144300	4
	Lock washer, ¼	H0155300	4
	Flat washer, ¼	H0156200	4
50	Cap screw, ¼-20 x ⅜	H0068500	4
	Lock washer, ¼	H0155300	4
	Flat washer, ¼	H0156200	4

NOTICE: THIS CONTAINS CONFIDENTIAL, PROPRIETARY AND NON-PUBLIC INFORMATION OF ITEK GRAPHIX CORP. DUPLICATION OR REPRODUCTION IN WHOLE OR IN PART OR DISCLOSURE HEREOF TO UNAUTHORIZED PERSONS WITHOUT THE PRIOR WRITTEN CONSENT OF ITEK GRAPHIX CORP. GRAPHIC SYSTEMS DIVISION IS PROHIBITED.

FOCAL PLANE ASSEMBLY

19E

Serial No 1054 and above

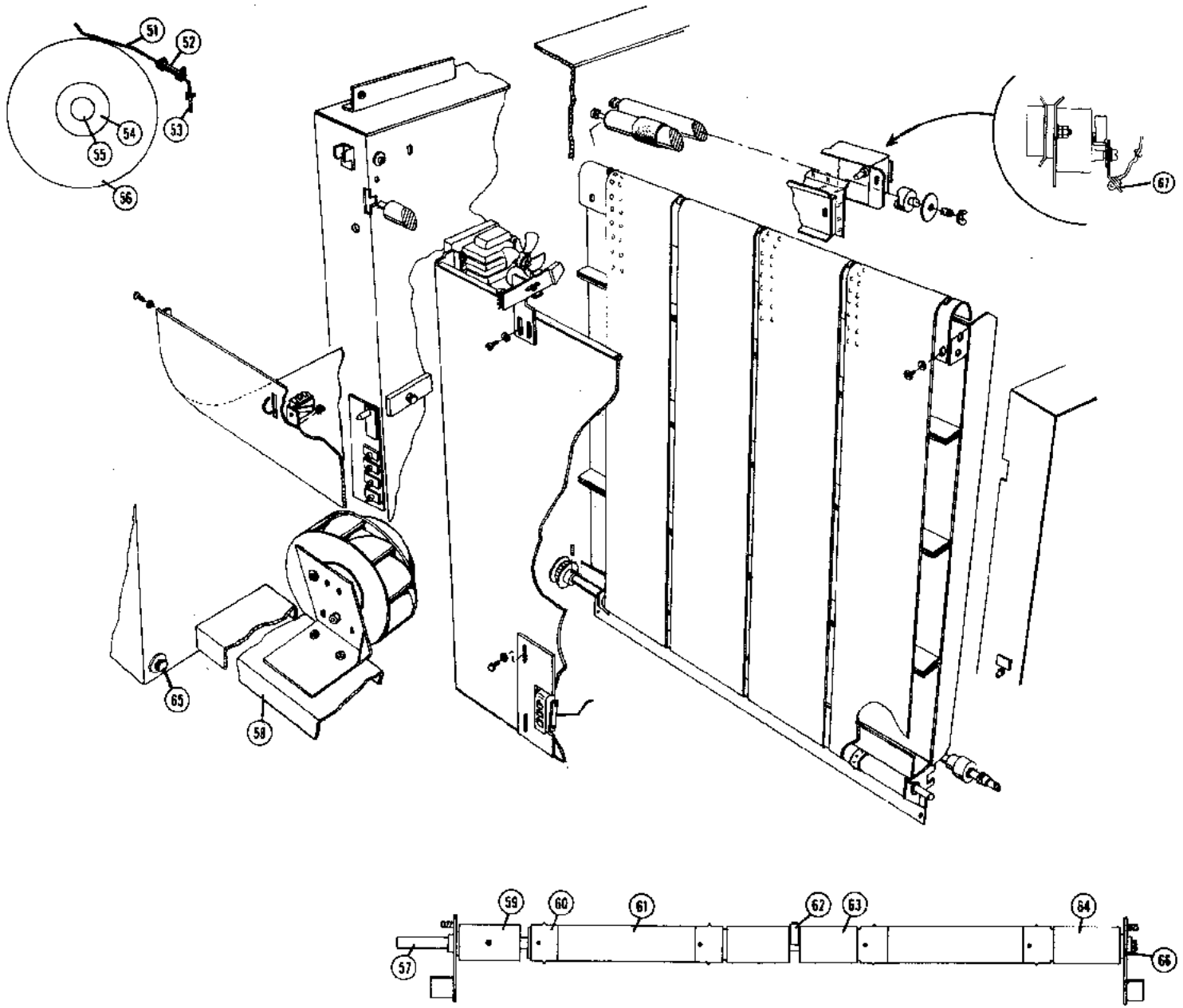

NOTICE: THIS CONTAINS CONFIDENTIAL, PROPRIETARY AND NON-PUBLIC INFORMATION OF ITEK GRAPHIX CORP. DUPLICATION OR REPRODUCTION (IN WHOLE OR IN PART) OR DISCLOSURE HEREOF TO UNAUTHORIZED PERSONS WITHOUT THE PRIOR WRITTEN CONSENT OF ITEK GRAPHIX CORP. GRAPHIC SYSTEMS DIVISION IS PROHIBITED.

FOCAL PLANE

REF.	DESCRIPTION	PART NO.	QTY.
51	Drag spring	20124301	2
52	Plate assembly	20124401	2
	Screw, 8-32 x 5/16	H0586000	4
	Lock washer, #8	H0155100	4
53	Paper tension bracket	20122901	1
	Screw, 10-32 x ⅜	H0472100	2
	Lock washer, #10	H0155200	2
54	Nut	19162901	2
55	Spool shaft	20106101	1
56	Spool end	20178301	1
57	Roller shaft	20319001	1
58	Tie bar	20123801	1
59	Roller segment, adjustable	20318701	1
	Set screw, 10-32 x ¼	H0691500	1
60	Sprocket	20180901	4
	Pin, 3/32 x ⅞	H0513700	4
61	Roller segment	20203201	2
62	Center bearing	20319901	1
	Set screw, 6-32 x ⅜	H0077400	2
63	Roller segment	20318901	2
64	Roller segment	20318801	1
65	Flat washer, ¼	H0156200	4
	Spacer	40150176	2
	Lock washer, ¼	H0155300	2
	Cap screw, ¼-20 x ⅝	H0478300	2
66	Bearing	09258014	2
67	Sensor assembly	20504801	1
	Spacer – insulator	20537401	1
	Sensor Lamp (wire attached)	20504601	

NOTICE: THIS CONTAINS CONFIDENTIAL, PROPRIETARY AND NON-PUBLIC INFORMATION OF ITEK GRAPHIX CORP. DUPLICATION OR REPRODUCTION IN WHOLE OR IN PART OR DISCLOSURE HEREOF TO UNAUTHORIZED PERSONS WITHOUT THE PRIOR WRITTEN CONSENT OF ITEK GRAPHIX CORP. GRAPHIC SYSTEMS DIVISION IS PROHIBITED.

Serial No. 1053 and below

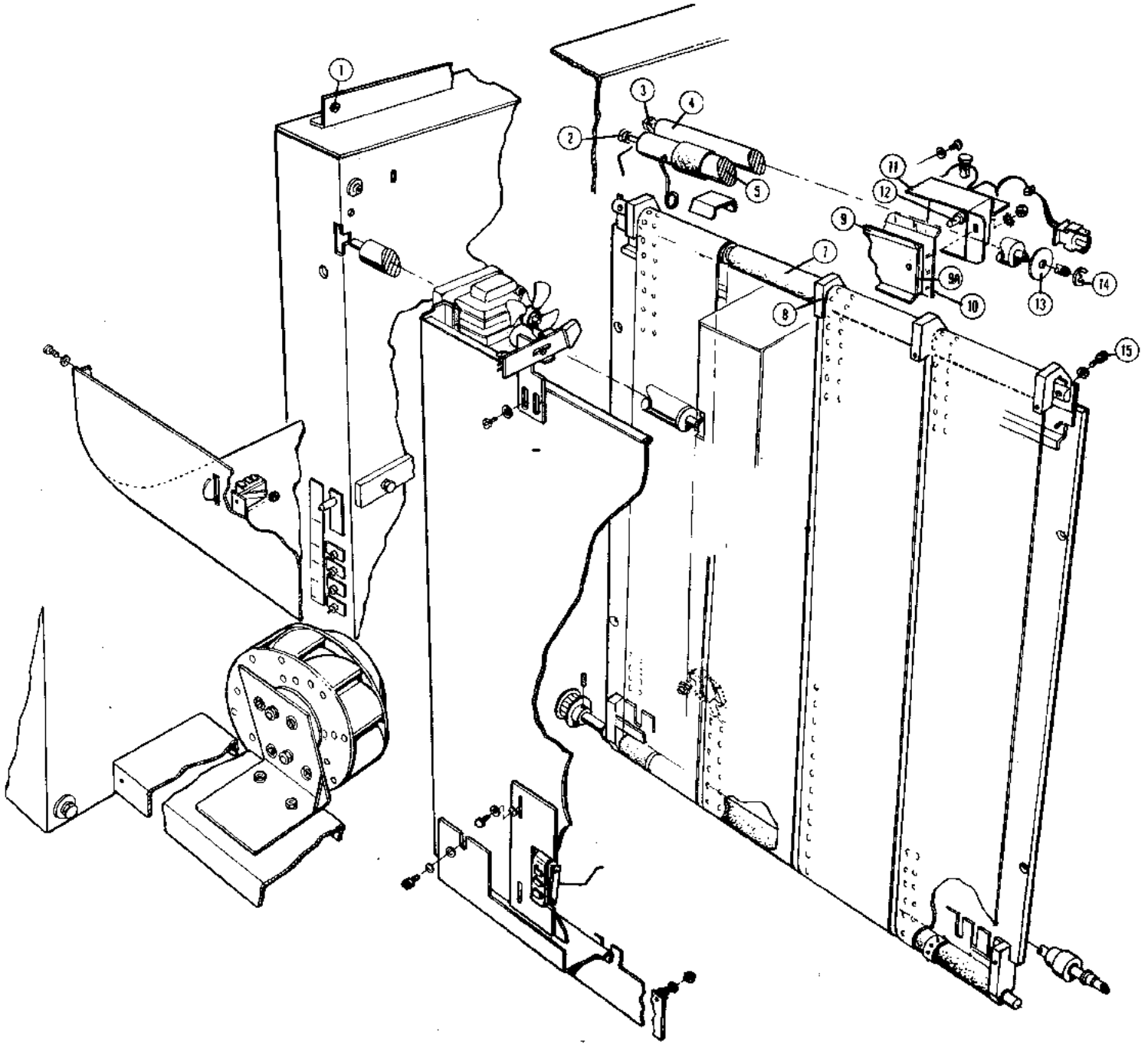

NOTICE: THIS CONTAINS CONFIDENTIAL, PROPRIETARY AND NON-PUBLIC INFORMATION OF ITEK GRAPHIX CORP. DUPLICATION OR REPRODUCTION IN WHOLE OR IN PART, OR DISCLOSURE HEREOF TO UNAUTHORIZED PERSONS WITHOUT THE PRIOR WRITTEN CONSENT OF ITEK GRAPHIX CORP. GRAPHIC SYSTEMS DIVISION IS PROHIBITED.

FOCAL PLANE ASSY.

REF.	DESCRIPTION	PART NO.	QTY.	AFTER S/N	USE P/N	COMMENTS
1	Machine screw 8-32 x ⅜"	H0472100				
2	Bearing	20177901	6			
3	Bearing	01371601	2			
4	Input roller	20108901	2		20311701	
5	Input roller	20083001				
7	Idler assy.	20145901	2			
8	Spacer	20161901	4			
	Spirol pin	20136001				
	Spacer	H0513700				
	Screw	19392001	4			
9	Guide	H0683100				
9A	Guide spacer	20279501				
10	Guide (clear plastic)	20391601	2			
11	Fogger assy (new style with PCB)	20254901	1			
12	Lamp	19214301				
13	Washer (plastic)	40152478	2			
14	E-Ring	H0933100	2			
15	Cap screw 10-21 x ½"	H0279100	2			
	Flat washer	H0156900	2			
16	Platen assy.	20104701	4 per			
17	Transport belt (set)	20168101	4 per			
19	Sprocket assy.	20199801				
20	Sprocket	20180901	4			
21	Sprocket assy.	20203201	3			
	Set screw	H0513700	4			
22	Set screw 8-32 x ¼"	H0113400				
23	Pulley	20096101				
NS	Fogger PCB	20241301				

NOTICE: THIS CONTAINS CONFIDENTIAL, PROPRIETARY AND NON-PUBLIC INFORMATION OF LITEK GRAPHIX CORP. DUPLICATION OR REPRODUCTION IN WHOLE OR IN PART OR DISCLOSURE HEREOF TO UNAUTHORIZED PERSONS WITHOUT THE PRIOR WRITTEN CONSENT OF LITEK GRAPHIX CORP. GRAPHIC SYSTEMS DIVISION IS PROHIBITED.

Serial No. 1053 and below

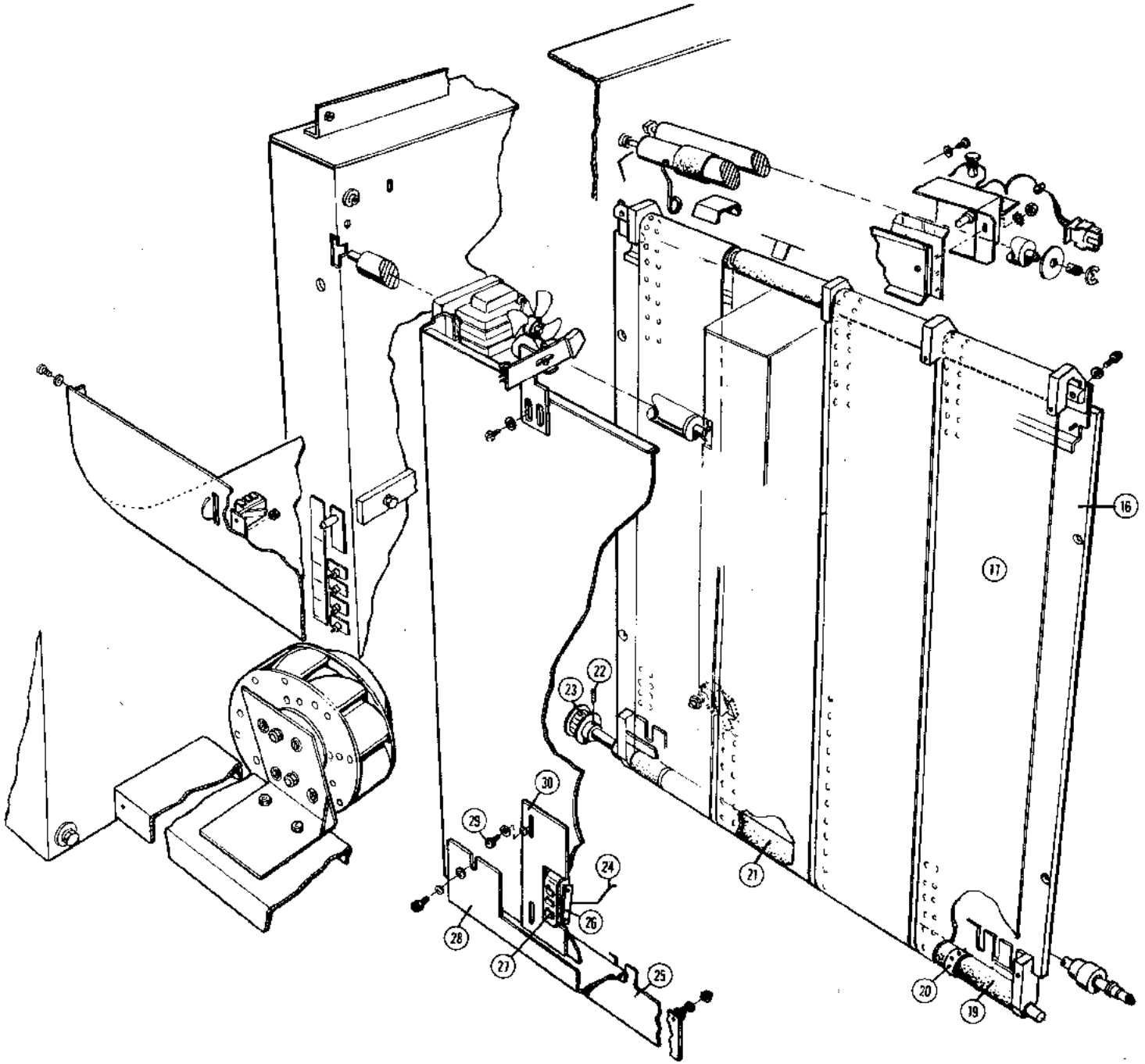

NOTICE: THIS CONTAINS CONFIDENTIAL, PROPRIETARY AND NON-PUBLIC INFORMATION OF ITEK GRAPHIX CORP. DUPLICATION OR REPRODUCTION (IN WHOLE OR IN PART) OR DISCLOSURE HEREOF TO UNAUTHORIZED PERSONS WITHOUT THE PRIOR WRITTEN CONSENT OF ITEK GRAPHIX CORP. GRAPHIC SYSTEMS DIVISION IS PROHIBITED.

FOCAL PLANE ASSY.

REF.	DESCRIPTION	PART NO.	QTY.	AFTER S/N	USE P/N	COMMENTS
24	Actuator	20150001				
	Sleeving	E0189000				
25	Input guide	20162901				
26	Nut plate	08949300				
27	Switch	19285001				
28	Paper guide bracket assy.	20175101				
29	Machine screw 10-32 x ⅜"	H0480000	2			
	Flat washer	H0156000	2			
	Lock washer	H0155200	2			
30	End sense switch weldment	20097001				
31	Vacuum back weld. assy.	20126801				
32	Machine screw 10-32 x ⅜"	H0465400	4			
	Flat washer	H0156000	4			
	Lock washer	H0155200	4			
33	Paper guide assy.	20156201				
34	Switch	19726501				
35	Hex nut 6-32	H0144100	2			
	Lock washer	H0155000	2			
	Flat wsaher	H0156400	2			
36	Reflective sensor PCB assy.	20378501				
37	Belt shaft	20109101				
38	Centrifugal blower assy.	20093401	2			
39	Blower mount	20130301				
40	Cap screw ¼-20 x ⅜"	H0068500				
	Flat washer	H0156200				
	Lock washer	H0155300				
41	Machine screw 4-40 x ¼"	H0725000 (metric)				
	Flat washer	H0156300				
	Lock washer	H0155100				
42	Roller	20157901	2			

NOTICE: THIS CONTAINS CONFIDENTIAL, PROPRIETARY AND NON-PUBLIC INFORMATION OF ITEK GRAPHIX CORP. DUPLICATION OR REPRODUCTION (IN WHOLE OR IN PART) OR DISCLOSURE THEREOF TO UNAUTHORIZED PERSONS WITHOUT THE PRIOR WRITTEN CONSENT OF ITEK GRAPHIX CORP. GRAPHIC SYSTEMS DIVISION IS PROHIBITED.

Revised 4/86

Serial No. 1053 and below

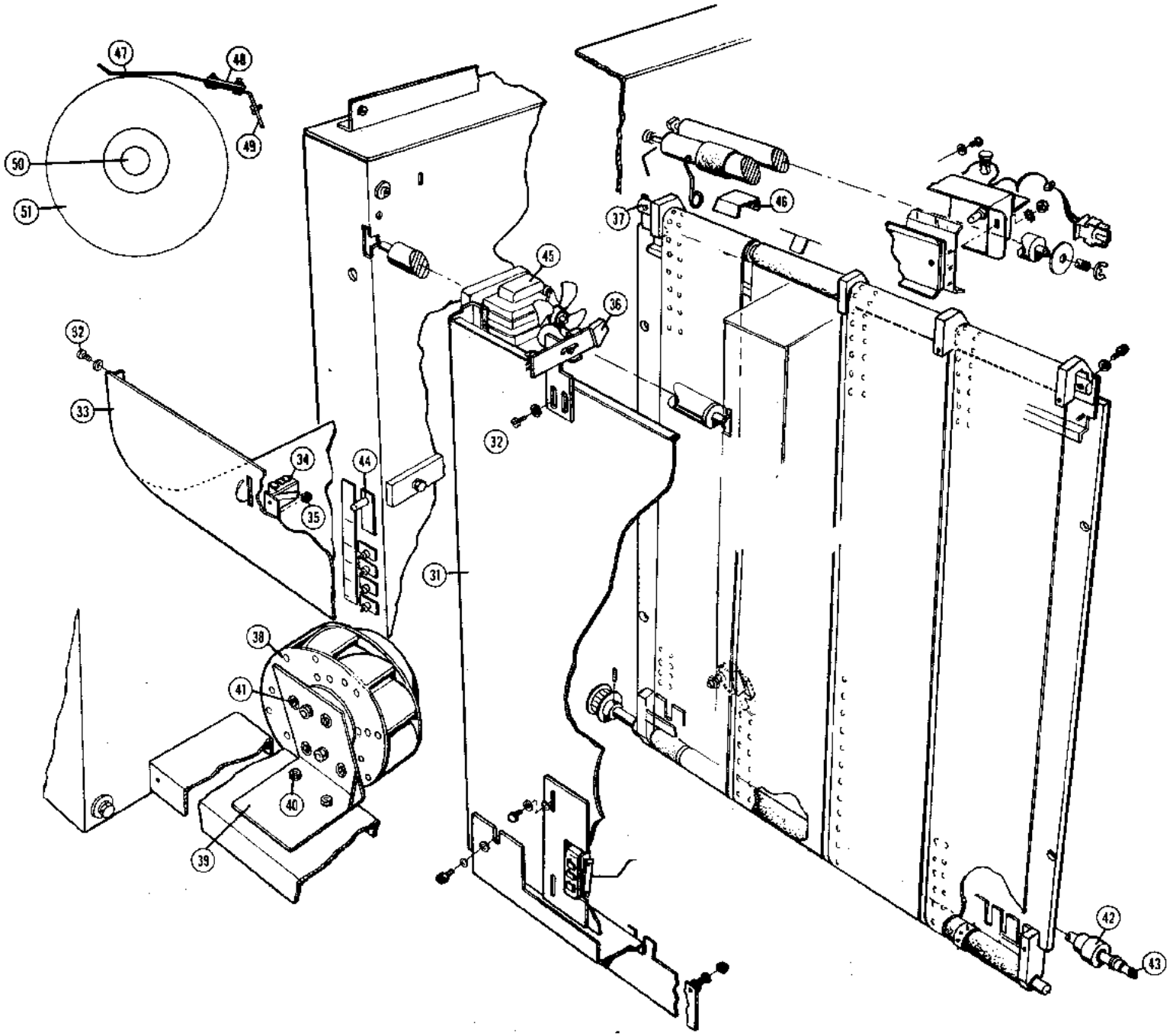

NOTICE: THIS CONTAINS CONFIDENTIAL, PROPRIETARY AND NON-PUBLIC INFORMATION OF ITEK GRAPHIX CORP. DUPLICATION OR REPRODUCTION IN WHOLE OR IN PART OR DISCLOSURE HEREOF TO UNAUTHORIZED PERSONS WITHOUT THE PRIOR WRITTEN CONSENT OF ITEK GRAPHIX CORP. GRAPHIC SYSTEMS DIVISION IS PROHIBITED.

FOCAL PLANE ASSY.

REF.	DESCRIPTION	PART NO.	QTY.	AFTER S/N	USE P/N	COMMENTS
43	Platen roller assy.	20319801				
	a. Spring	09572400	2			
	b. Bracket R.H.	20162401				
	c. Bracket L.H.	20162501				
	d. "E" ring	H0033100	2			
	e. Grip ring	H0002000	2			
	f. Bearing	01371600	2			
44	Knife interlock switch	20128501				
NS	Suppressor assy.	20156901				
45	Wind motor	09096201				
NS	Transport motor	09096201				
46	Output guide	20162901				
47	Brake pad	20124301	2			
48	Nut plate	20124401	2			
	Screw, 8-32 x 5/16	H0586000	4			
	Lock washer, #8	H0155100	4			
49	Bracket	20122901	1			
	Screw, 10-32 x ¾	H0480000	2			
	Lock washer, #10	H0155200	2			
50	Spool shaft	20106101				
51	Spool end	20178301	2			
	Spool nut	19162901				

NOTICE: THIS CONTAINS CONFIDENTIAL, PROPRIETARY AND NON-PUBLIC INFORMATION OF ITEK GRAPHIX CORP. DUPLICATION OR REPRODUCTION IN WHOLE OR IN PART OR DISCLOSURE HEREOF TO UNAUTHORIZED PERSONS WITHOUT THE PRIOR WRITTEN CONSENT OF ITEK GRAPHIX CORP. GRAPHIC SYSTEMS DIVISION IS PROHIBITED.

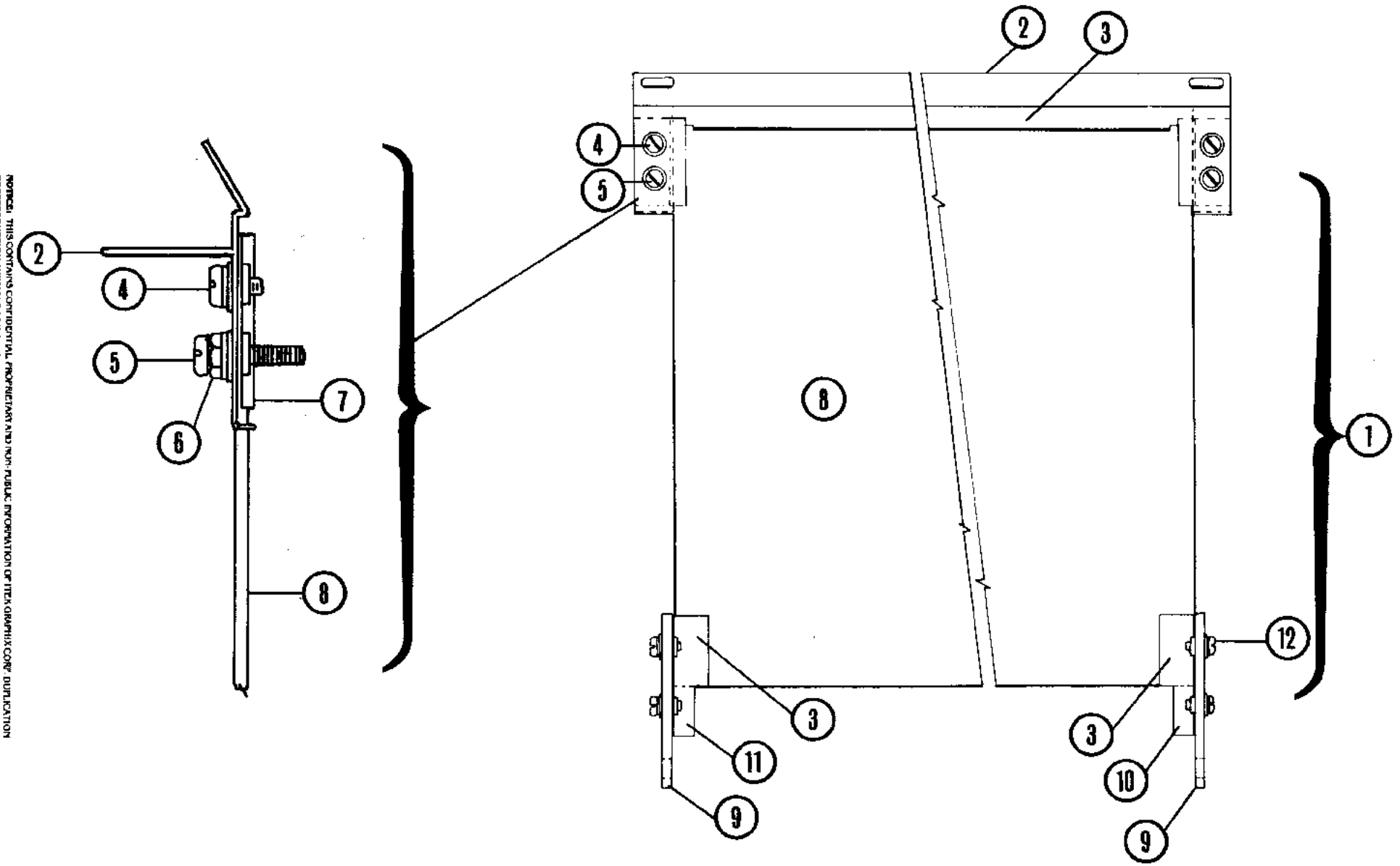

NOTICE: THIS CONTAINS CONFIDENTIAL PROPRIETARY AND NON-PUBLIC INFORMATION OF ITEK GRAPHIX CORP. DUPLICATION OR REPRODUCTION IN WHOLE OR IN PART) OR DISCLOSURE HEREOF TO UNAUTHORIZED PERSONS WITHOUT THE PRIOR WRITTEN CONSENT OF ITEK GRAPHIX CORP. GRAPHIC SYSTEMS DIVISION IS PROHIBITED.

FOCAL PLANE GLASS KIT 20338101

Includes items 1 through 23 and harness asembly P/N 20337401

REF.	DESCRIPTION	PART NO.	QTY.	AFTER S/N	USE P/N	COMMENTS
1	Cover Glass Assy. (Includes Items 1-12)	20337301	1			
2	Guide	20337101	1			
3	Adhesive (Glues glass to metal)	40143535				
3a	Activator for Adhesive	40143536				
4	Screw 6-32 x ¼	H0470400				
	Washer	H0156400				
	Star Washer	H0154700				
5	Machine Screw 6-32 x ¾	H0039000				
6	Nut 6-32	H0144100				
	Washer	H0156400				
	Star Washer	H0154700				
7	Glass Retainer	20337001	2			
8	Glass 17" x 19.3" (⅛" float glass edges cut and swiped)	20337201	1			
9	Plastic Block	20336801	2			
10	R. H. Bracket	20336701	1			
11	L. H. Bracket	20336601	1			
12	Screw 6-32 x 5/16	H0470200				
	Washer	H0156400				
	Star Washer	H0154700				

NOTICE: THIS CONTAINS CONFIDENTIAL, PROPRIETARY AND NON-PUBLIC INFORMATION OF ITEK GRAPHIX CORP. OUR PUBLICATION OR REPRODUCTION (IN WHOLE OR IN PART) OR DISCLOSURE HEREOF TO UNAUTHORIZED PERSONS WITHOUT THE PRIOR WRITTEN CONSENT OF ITEK GRAPHIX CORP. GRAPHIC SYSTEMS DIVISION IS PROHIBITED.

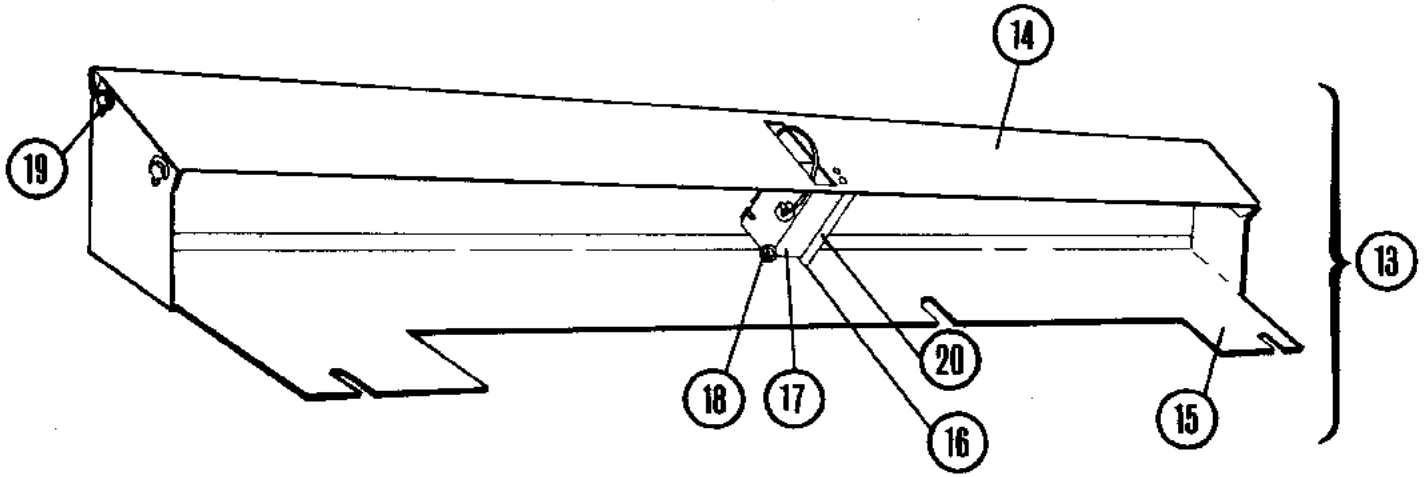

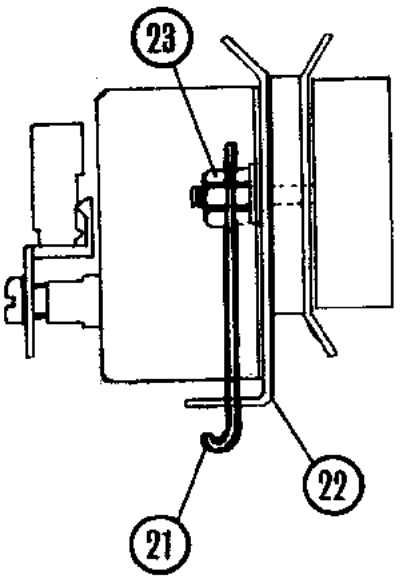

NOTICE: THIS CONTAINS CONFIDENTIAL, PROPRIETARY AND NON-PUBLIC INFORMATION OF ITEK GRAPHIX CORP. DUPLICATION OR REPRODUCTION (IN WHOLE OR IN PART) OR DISCLOSURE HEREOF TO UNAUTHORIZED PERSONS WITHOUT THE PRIOR WRITTEN CONSENT OF ITEK GRAPHIX CORP. GRAPHIC SYSTEMS DIVISION IS PROHIBITED.

FOCAL PLANE GLASS KIT 20338101

Includes items 1 through 23 and
harness assembly P/N 20337401

REF.	DESCRIPTION	PART NO.	QTY.	AFTER S/N	USE P/N	COMMENT
13	Guide & Switch Assy. (includes Item 14 - 20)	20338001	1			
14	Guide Assembly	20337901	1			
15	Guide Holder	20175101	1			
16	Switch Bracket	20106901	1			
	Nut	H0916400				
17	Switch	19726501	1			
18	Machine Screw 4-40 x ¾	H0584100	2			
	Lock Washer	H0155700				
	Flat Washer	H0156500				
19	Machine Screw hex head 6-32 x 5/16	H0484000	4			
	Lock Washer	H0155000				
	Flat Washer	H0156400				
20	Nut Plate	19066001				
21	Hanger Bracket	20336901	2			
22	Transparent Guide	20391601	1			
23	Nut	H0904100	2			
NS	Harness Assembly	20337401	1			
NS	Grommet	E0227900	1			

NOTICE: THIS CONTAINS CONFIDENTIAL, PROPRIETARY AND NON-PUBLIC INFORMATION OF ITEK GRAPHIX CORP. DUPLICATION OR REPRODUCTION (IN WHOLE OR IN PART) OR DISCLOSURE HEREOF TO UNAUTHORIZED PERSONS WITHOUT THE PRIOR WRITTEN CONSENT OF ITEK GRAPHIX CORP. GRAPHIC SYSTEMS DIVISION IS PROHIBITED.

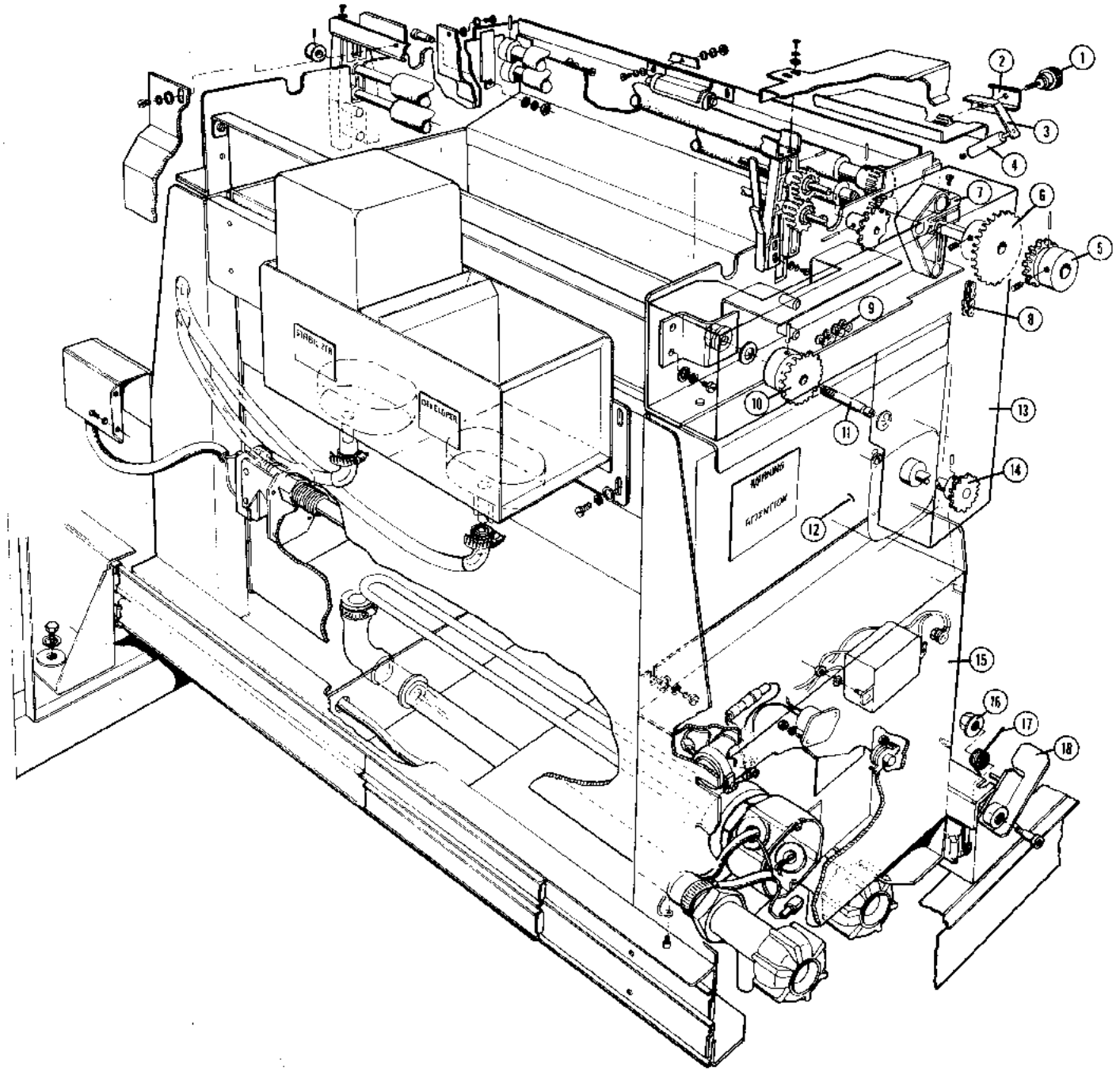

NOTICE: THIS CONTAINS CONFIDENTIAL, PROPRIETARY AND NON-PUBLIC INFORMATION OF ITEK GRAPHIX CORP. DUPLICATION OR REPRODUCTION (IN WHOLE OR IN PART) OR DISCLOSURE HEREOF TO UNAUTHORIZED PERSONS WITHOUT THE PRIOR WRITTEN CONSENT OF ITEK GRAPHIX CORP. GRAPHIC SYSTEMS DIVISION IS PROHIBITED.

PROCESSOR ASSEMBLY 20176701

Does Not Include Item #30

REF.	DESCRIPTION	PART NO.	QTY.	AFTER S/N	USE P/N	COMMENTS
19	Screw, special	40140007				
	Washer	H0188700	2			
20	Delay timer 50/60 Hz	See Chart on Pages 29A & B			08700135	Capacitor
21	Overload prot. 60 Hz	09236302			09684700	Bracket
	Overload prot. 50 Hz	09236301			07134200	Capacitor cover
22	Triac assy.	20123901				
23	Filter choke assy.	20099702				
24	Heater	01063900				
26	Hose clamp	08327605	4			
27	Valve assy.	09716600	2			
28	Slide L.H.	20114501				
NS	Slide R.H.	20114502				
29	Hose	20276601	2			
30	Bottle	06749400	2			
	Feeder valve	19826201	2			
32	Nut	19138401	2			
33	Thermostat assy.	19032501			20483601	
34	Thermostat cover	05745400				
	Screws	H0470400	4			
NS	Gasket (therm.)	06885200				
35	Hose clamp	08327605	4			
36	Valve adapter	09717000	2			
	Label - Developer	20499501				
	Label - Stabilizer	20499601				

NOTICE: THIS CONTAINS CONFIDENTIAL, PROPRIETARY AND NON-PUBLIC INFORMATION OF ITEK GRAPHIX CORP. DUPLICATION OR REPRODUCTION (IN WHOLE OR IN PART) OR DISCLOSURE HEREOF TO UNAUTHORIZED PERSONS WITHOUT THE PRIOR WRITTEN CONSENT OF ITEK GRAPHIX CORP. GRAPHIC SYSTEMS DIVISION IS PROHIBITED.

PROCESSOR MOTOR START RELAY
Identification Chart

NOTE: Before ordering parts determine machine configuration utilizing the sketches below. Since so many machines have been updated in the field, you should not attempt to determine relay configuration by machine installation date or serial number. You or someone else must look at the circuit before ordering parts.

CONFIGURATION I

Original Start Relay Type - Obsolete. No replacement parts available. If old relay fails, order a complete conversion kit, P/N 20280401.

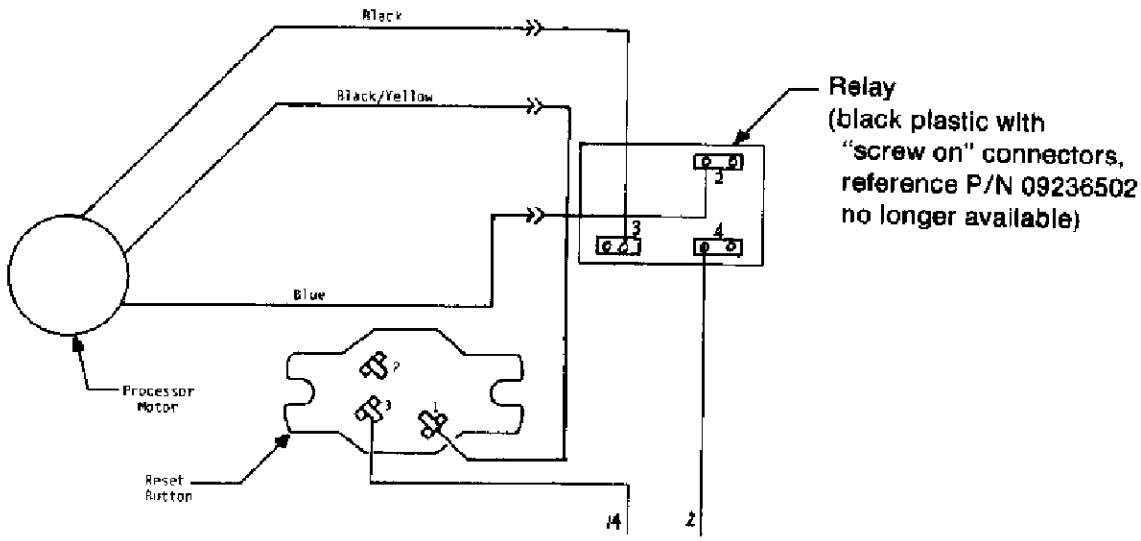

CONFIGURATION II

Original Start Relay Type with Added Resistor - Obsolete. No replacement parts available. If old relay fails, order a complete conversion kit, P/N 20280401.

When installing conversion kit, remove and discard gold resistor.

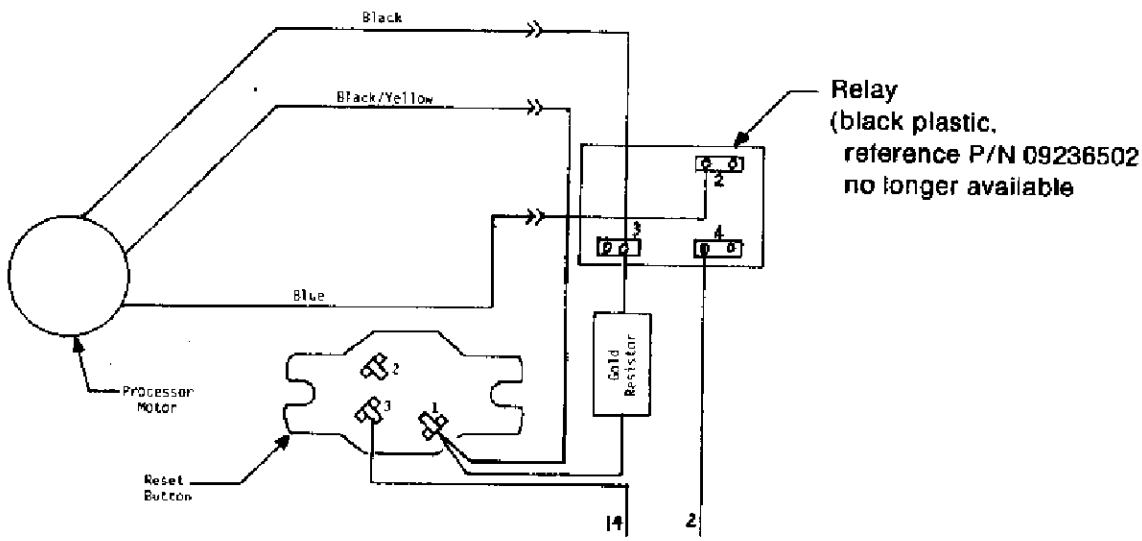

NOTE:
After machines have been converted from Configuration I & II, 19164806 time delay relays should be used as replacements.

NOTICE: THIS CONTAINS CONFIDENTIAL PROPRIETARY AND NON-PUBLIC INFORMATION OF ITEK GRAPHIX CORP. DUPLICATION OR REPRODUCTION (IN WHOLE OR IN PART) OR DISCLOSURE HEREOF TO UNAUTHORIZED PERSONS WITHOUT THE PRIOR WRITTEN CONSENT OF ITEK GRAPHIX CORP. GRAPHIC SYSTEMS DIVISION IS PROHIBITED.

CONFIGURATION III

Solid State Time Delay Relay No Longer Available. The relay may be directly replaced with P/N 19164806.

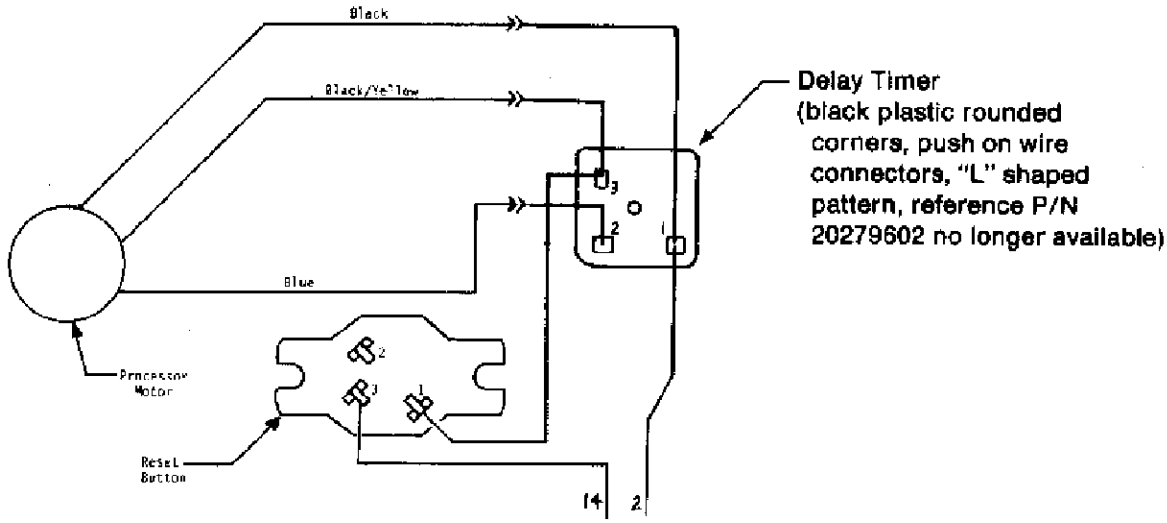

CONFIGURATION IV

Solid State Time Delay Relay – P/N 19164806

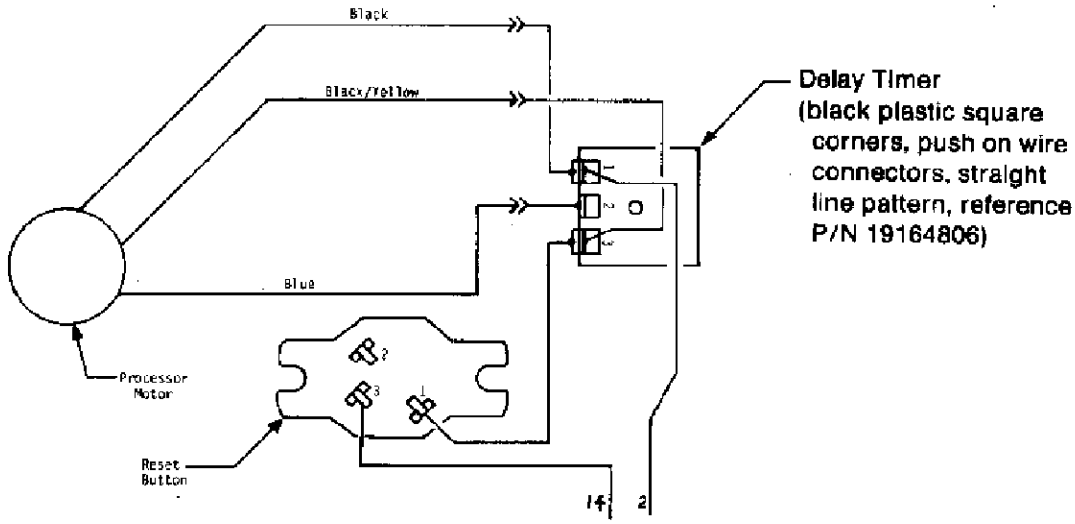

CONFIGURATION V

Some machines will appear in the future with capacitor start motors. The machines do not use starting (or time delay relays). A typical capacitor start wiring diagram appears below as reference information.

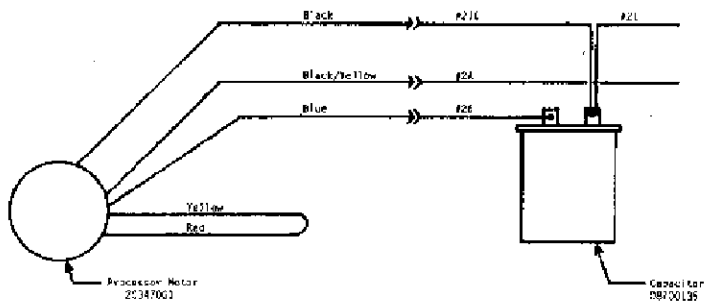

NOTICE: THIS CONTAINS CONFIDENTIAL, PROPRIETARY AND NON-PUBLIC INFORMATION OF ITEK GRAPHIX CORP. DUPLICATION OR REPRODUCTION (IN WHOLE OR IN PART) OR DISCLOSURE HEREOF TO UNAUTHORIZED PERSONS WITHOUT THE PRIOR WRITTEN CONSENT OF ITEK GRAPHIX CORP. GRAPHIC SYSTEMS DIVISION IS PROHIBITED.

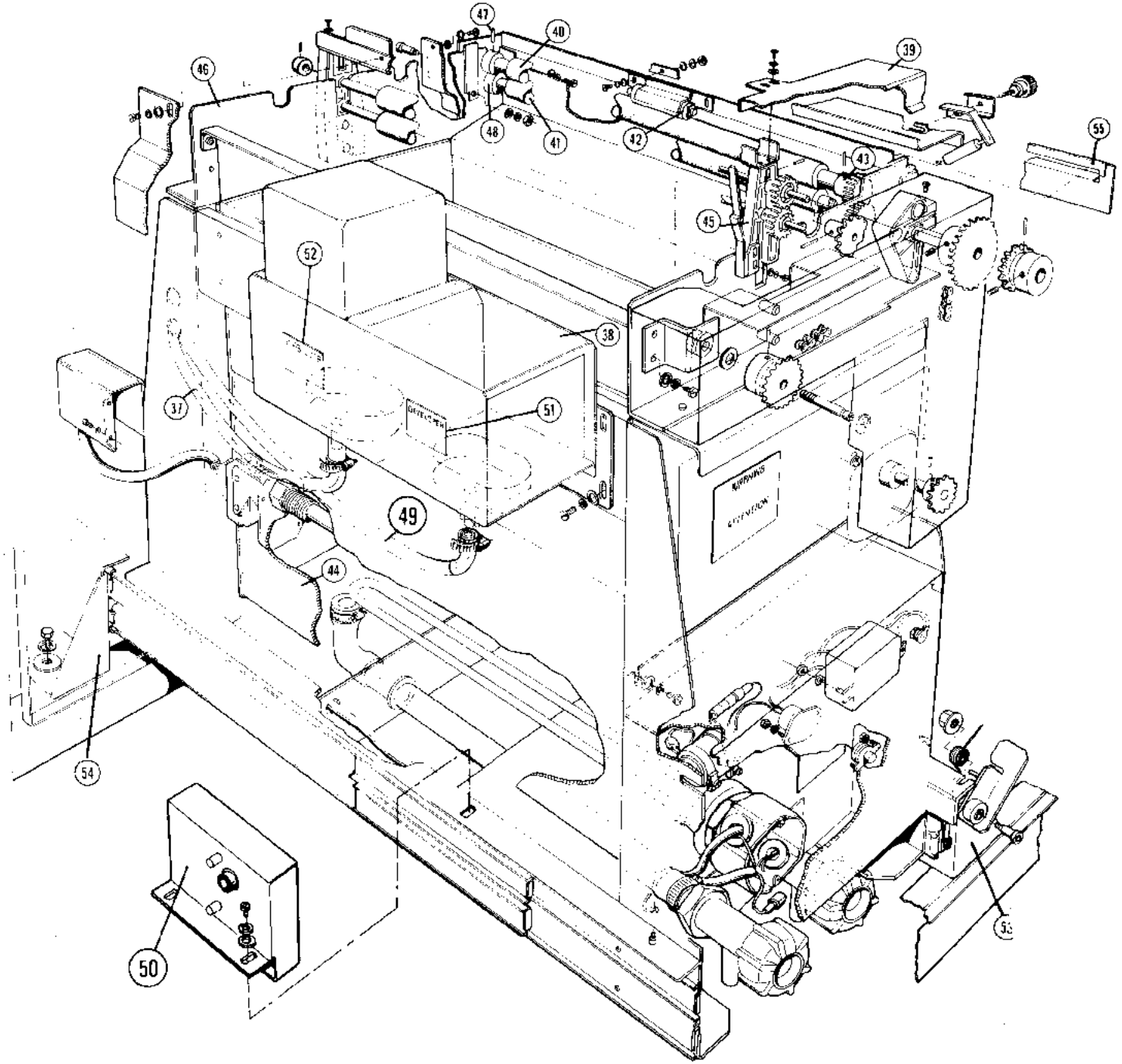

NOTICE: THIS CONTAINS CONFIDENTIAL, PROPRIETARY AND NON-PUBLIC INFORMATION OF ITEK GRAPHIX CORP. DUPLICATION OR REPRODUCTION (IN WHOLE OR IN PART) OR DISCLOSURE HEREOF TO UNAUTHORIZED PERSONS WITHOUT THE PRIOR WRITTEN CONSENT OF ITEK GRAPHIX CORP. GRAPHIC SYSTEMS DIVISION IS PROHIBITED.

PROCESSOR ASSEMBLY 20176701

Does Not Include Item #30

REF.	DESCRIPTION	PART NO.	QTY	AFTER S/N	USE P/N	COMMENTS
37	Hose, .500" dia.	40161453	1		20266001	.750" dia.
38	Bottle holder assy. (steel)	20173701			20248001	PVC Plastic
	Bottle Stand				20554301	PVC Plastic
39	Sprocket cover	20184201				
40	Upper exit roller	09694801				
41	Lower exit roller	09652101				
42	Pressure roller assy.	05745600				
43	Gear	09653600	2			
	Pin	H0508500	2			
	Tank	09700002				
44	Reducer (for old styles)	20170601				
45	Squeegee roller assy.	20276901				
NS	Scale	19047402				
47	Set screw	H0324000	2			
48	Collar	09651700	2			
49	Hose, .500" dia.	40161453	1		20266101	.750" dia.
50	Switch cover assy.	20276501				
	Compressions spring	20125301	2			
	Limit control	19406901				
NS	Drain Pan	20272701				
51	Developer Label	19878901				
52	Stabilizer Label	19879001				
53	Slide bracket assy. RH	20187101	1			
54	Slide bracket assy. LH	20174201	1			
55	Exit guide	20464101	A/R			Dryer Model Only

NOTICE: THIS CONTAINS CONFIDENTIAL, PROPRIETARY AND NON-PUBLIC INFORMATION OF TEKGRAPHIX CORP. DUPLICATION

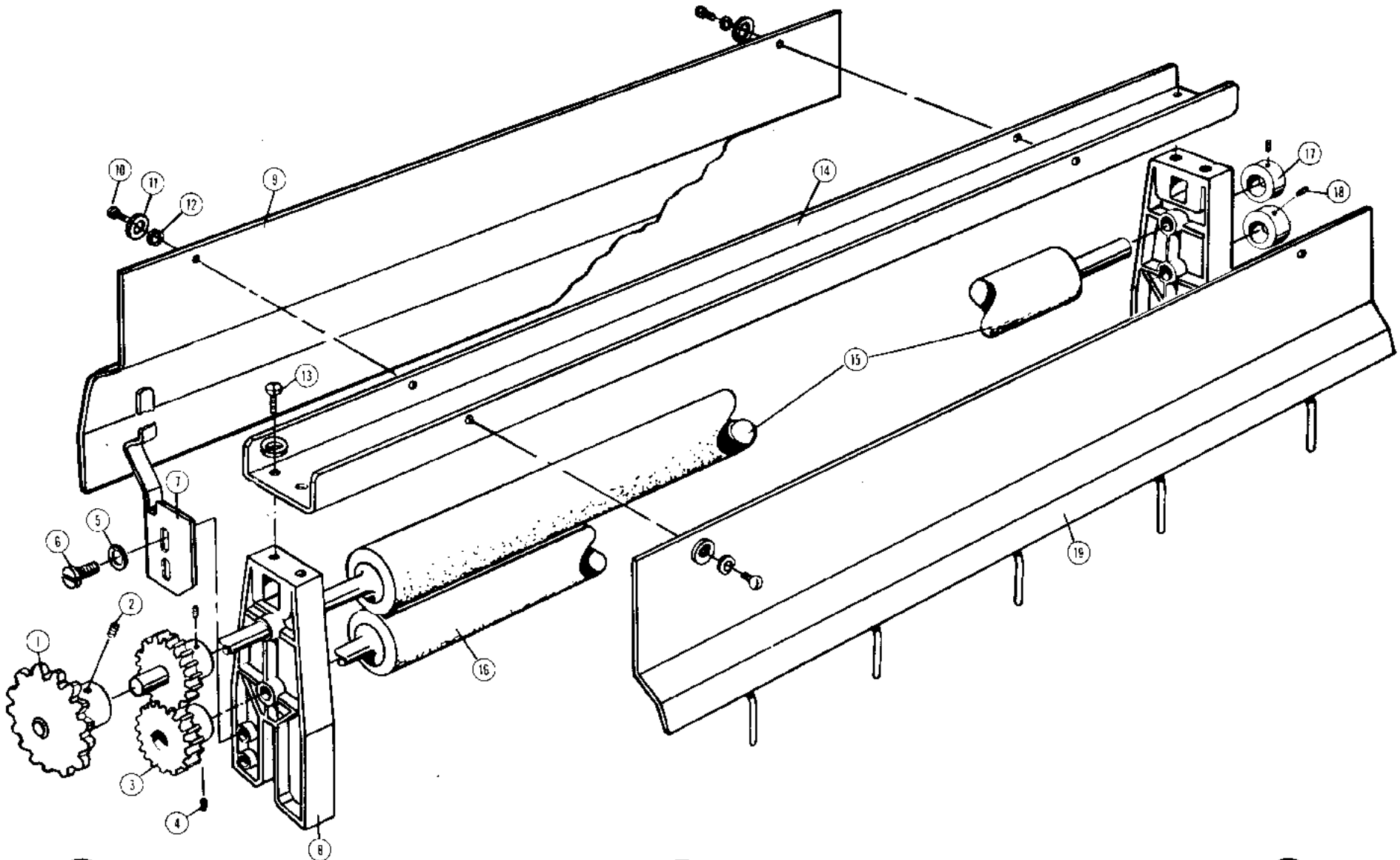

NOTICE: THIS CONTAINS CONFIDENTIAL, PROPRIETARY AND NON-PUBLIC INFORMATION OF HERA GRAPHIX, CORP. DUPLICATION OR REPRODUCTION (IN WHOLE OR IN PART) OR DISCLOSURE HEREOF TO UNAUTHORIZED PERSONS WITHOUT THE PRIOR WRITTEN

CENTER SQUEEGEE ROLLERS

20276901

REF.	DESCRIPTION	PART NO.	QTY.	AFTER S/N	USE P/N	COMMENTS
1	Sprocket	09185400				
2	Pin	H0004500				
3	Gear	09185200	2			
4	Pin	H0513800	2			
5	Washer	H0156400	4			
6	Screw	H0262800	6			
7	Clip assy.	07788200				
8	Bearing	09185100	2			
9	Entrance guide	20438201				
10	Screw	H0470400				
11	Washer	H0156400				
12	Lock washer	H0155000				
13	Screw	H0262800				
14	Channel	09694401				
15	Roller	09653102				
16	Roller	09653103				
17	Collar	09185000	2			
18	Screw	H0116000	2			
19	Exit guide	20438101				

NOTICE: THIS CONTAINS CONFIDENTIAL PROPRIETARY AND NON-PUBLIC INFORMATION OF ITEK GRAPHIX CORP. DUPLICATION OR REPRODUCTION IN WHOLE OR IN PART OR DISCLOSURE HEREOF TO UNAUTHORIZED PERSONS WITHOUT THE PRIOR WRITTEN CONSENT OF ITEK GRAPHIX CORP. GRAPHIC SYSTEMS DIVISION IS PROHIBITED.

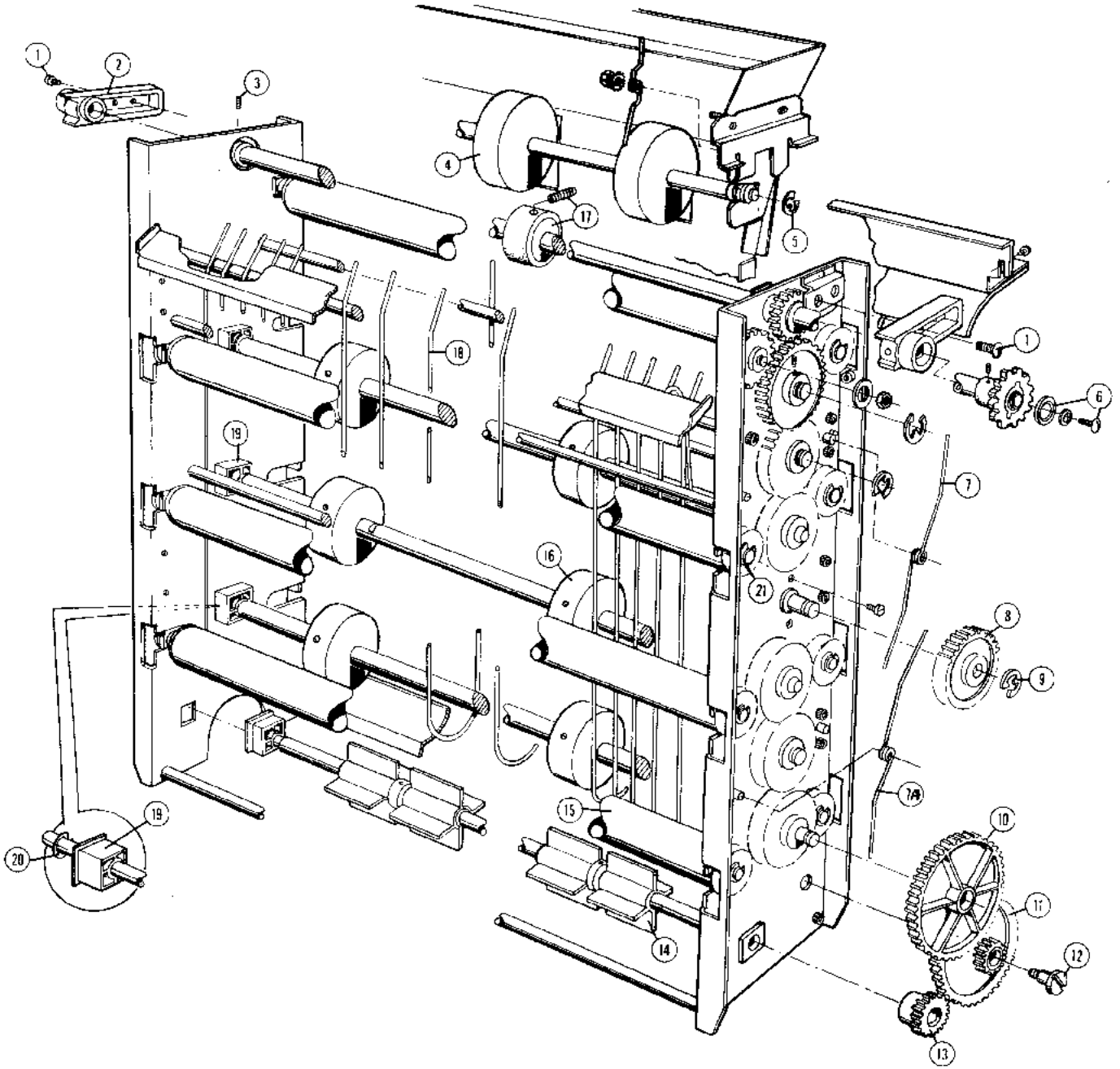

NOTICE: THIS CONTAINS CONFIDENTIAL, PROPRIETARY AND NON-PUBLIC INFORMATION OF ITEK GRAPHIX CORP. DUPLICATION OR REPRODUCTION IN WHOLE OR IN PART OR DISCLOSURE HEREOF TO UNAUTHORIZED PERSONS WITHOUT THE PRIOR WRITTEN CONSENT OF ITEK GRAPHIX CORP. GRAPHIC SYSTEMS DIVISION IS PROHIBITED.

ROLLER FRAMES

07761409 - First Frame
07761501 - Second Frame

REF.	DESCRIPTION	PART NO.	QTY.	AFTER S/N	USE P/N	COMMENTS
1	Screw	H0465400	5			
2	Bearing	07434001	2			
	Nyliner	09768100	2			
3	Set screw	H0116200	2			
4	Roller	20170801	4	12/87	20542801	(1 piece rollers and shaft)
5	Retaining ring	H0932800	2			
6	Washer	09512800	2			
	Lock washer	H0155200				
	Screw	H0465400				
7	Spring (rear)	06884301	4			
7a	Spring (front)	06884300	4			
*7a	Spring (both)	06884300	8			
8	Gear 3OT	07426000	4			
9	Ring	H0933000	7			
10	Gear, combination	07447200				
11	Gear, idler	07447300				
12	Stud	09701100				
13	Gear, paddle	07446800				
14	Paddle wheel assy.	19012101				
	Paddle wheel	20209801				
15	Tension roller assy.	05842702	7			
16	Roller drive assy.	07761302	3	12/87	20557201	(1 piece rollers and shaft)
	Roller only	19669601	12			
17	Rubber roller	20170701	4			
	Screw	H0691200	4			
18	Inner guide	07740001				
19	Bearing	09699500	7			
20	Retaining ring	H0933000	7			
21	Retaining ring	H0932800	7			

Asterisk (*) denotes part of second roller frame only.

NOTICE: THIS CONTAINS CONFIDENTIAL PROPRIETARY AND NON-PUBLIC INFORMATION OF ITEK GRAPHIX CORP. DUPLICATION OR REPRODUCTION IN WHOLE OR IN PART OR DISCLOSURE HEREOF TO UNAUTHORIZED PERSONS WITHOUT THE PRIOR WRITTEN CONSENT OF ITEK GRAPHIX CORP. GRAPHIC SYSTEMS DIVISION IS PROHIBITED.

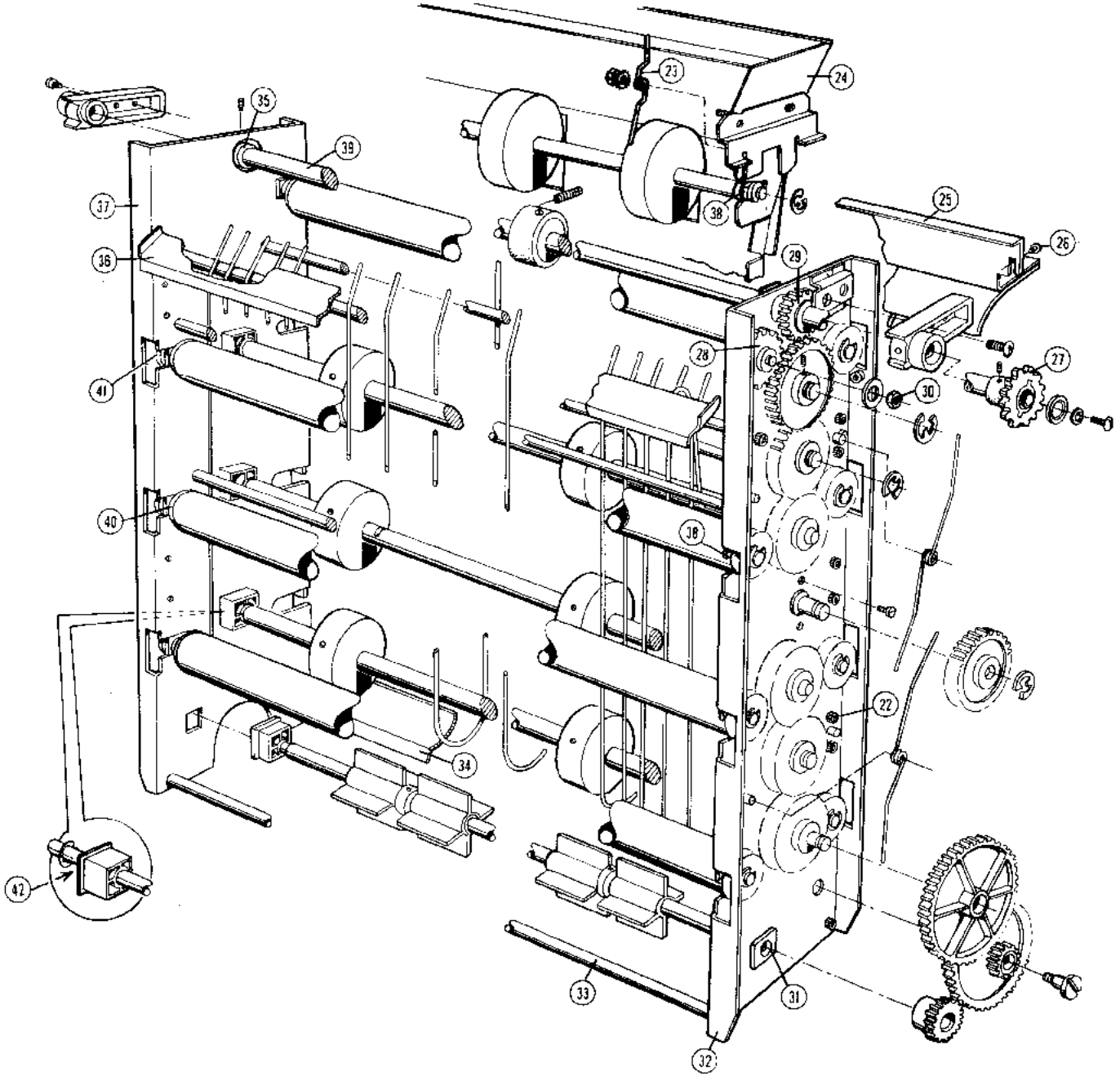

NOTICE: THIS CONTAINS CONFIDENTIAL, PROPRIETARY AND NON-PUBLIC INFORMATION OF ITEK GRAPHIX CORP. DUPLICATION OR REPRODUCTION IN WHOLE OR IN PART, OR DISCLOSURE HEREOF TO UNAUTHORIZED PERSONS WITHOUT THE PRIOR WRITTEN CONSENT OF ITEK GRAPHIX CORP. GRAPHIC SYSTEMS DIVISION IS PROHIBITED.

ROLLER FRAMES

07761409 - First Frame
07761501 - Second Frame

REF.	DESCRIPTION	PART NO.	QTY.	AFTER S/N	USE P/N	COMMENTS
22	Screw	H0318200	17			
23	Spring	09085101	2			
24	Paper chute	20184601				
*25	Rear transfer assy.	07758901				
*26	Screw	H0470300				
27	Sprocket	09532300		3/87	07472208	
28	Gear	07423600				
	Bushing	07423500				
	Washer ⅞	40152484	2			
29	Gear	07425700				
30	Nut	H0144400				
31	Bearing	07446600	2			
32	Side frame (gear)	07761000				
*32	Side frame (gear)	07761200				
33	Tie rod	09654301	2			
34	Turn guide	19683201				
35	Collar	07425200				
*36	Guide	07761601				
37	Side frame (plain)	07760900				
*37	Side frame (plain)	07761100				
38	Bearing	09787800				
39	Drive shaft	09086001		3/87	20375301	
40	End plug	07435800	7			
NS	End plug	07435900	7			Asterisk (*) denotes part of second roller frame only.
41	Retaining ring	H0930200				
42	Flat Washer, 3/8	H0156800				

NOTICE: THIS CONTAINS CONFIDENTIAL PROPRIETARY AND NON-PUBLIC INFORMATION OF ITEK GRAPHIX CORP. DUPLICATION OR REPRODUCTION IN WHOLE OR IN PART OR DISCLOSURE HEREOF TO UNAUTHORIZED PERSONS WITHOUT THE PRIOR WRITTEN CONSENT OF ITEK GRAPHIX CORP. GRAPHIC SYSTEMS DIVISION IS PROHIBITED.

LATCH SIDEPLATE ASSEMBLY

20352501

Serial No. 984 and above

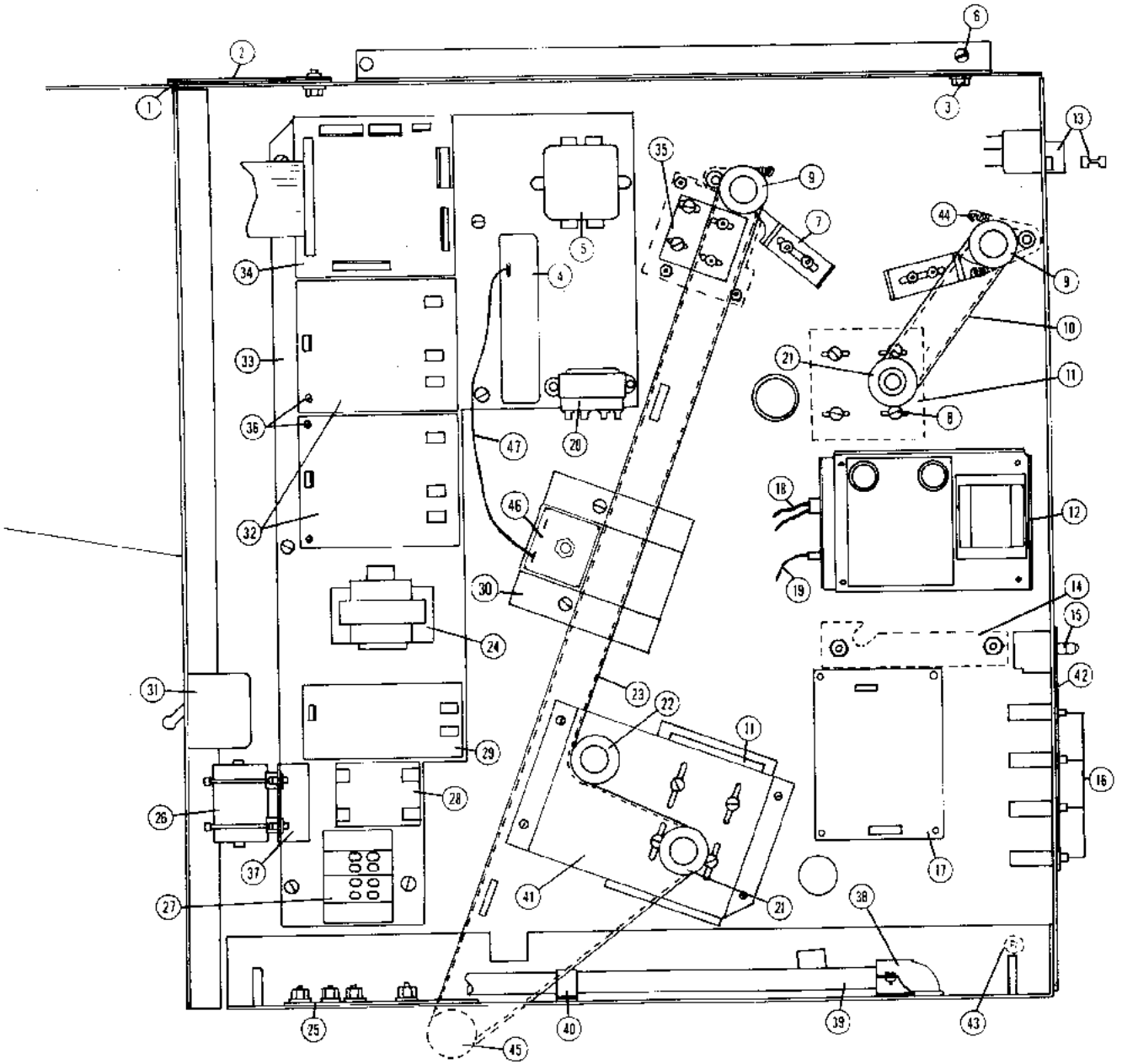

NOTICE: THIS CONTAINS CONFIDENTIAL PROPRIETARY AND NON-PUBLIC INFORMATION OF TEK GRAPHIX CORP. DUPLICATION OR REPRODUCTION (IN WHOLE OR IN PART) OR DISCLOSURE HEREOF TO UNAUTHORIZED PERSONS WITHOUT THE PRIOR WRITTEN CONSENT OF TEK GRAPHIX CORP. GRAPHIC SYSTEMS DIVISION IS PROHIBITED.

LATCH SIDE PLATE ASSEMBLY 20352501

REF.	DESCRIPTION	PART NO.	QTY.
1	Spacer	20046901	1
2	Retaining plate	20046801	1
	Lock washer, #10	H0155100	2
	Flat washer, #10	H0156000	2
	Screw, 10-32 x ⅝	H0483100	2
3	Screw, 8-32 x ⅜	H0482500	2
	Lock washer, #8	H0155100	2
	Flat washer, #8	H0156300	2
4	Terminal block	03692100	1
	Nut, 8-32	H0144200	2
	Flat washer, #8	H0156300	2
	Lock washer, #8	H0158400	2
5	RFI filter	40123950	1
	Nut, 8-32	H0123200	2
	Flat washer, #8	H0156300	2
	Lock washer, #8	H0158400	2
6	Screw, 8-32 x ½	H0472200	4
	Flat washer, #8	H0156300	4
	Lock washer, #8	H0155100	4
7	Bracket	19875601	2
	Screw, 8-32 x ¼	H0471900	4
	Lock washer, #8	H0155100	4
	Flat washer, #8	H0156300	4
8	Screw, 8-32 x 5/16	H0586000	4
	Flat washer, #8	H0156300	4
	Lock washer, #8	H0155100	4
9	Pulley	19349801	2
	Set screw, 8-32 x ¼	H0113400	2
10	Belt	20095901	1

REF.	DESCRIPTION	PART NO.	QTY.
11	Motor	09096201	2
	Screw, 8-32 x 5/16	H0586000	4
	Flat washer, #8	H0156300	4
	Lock washer, #8	H0155100	4
12	Power supply	20315901	1
	Screw, 6-32 x ½	H0014000	4
13	Switch, interlock	20286901	1
	Switch, cheater	20323301	A/R
14	Bearing, paper roll	20292301	4
	Screw, 8-32 x ⅝	H0472300	4
	Flat washer, #8	H0156300	4
	Lock washer, #8	H0155100	4
15	Push button switch	20128501	1
	Arc suppressor	20156902	1
16	Circuit breaker	40121703	4
	Retaining Clip	20426301	
17	Temperature PCB	20178201	1
	Standoff	20303501	4
	Screw, 6-32 x 7/16	H0036400	4
18	DC harness	20320401	1
19	AC harness	20320501	1
20	Transformer & harness	20374601	1
	Transformer only	20353101	1
	Screw, 6-32 x ¼	H0470400	2
	Flat washer, #6	H0156400	2
	Lock washer, #6	H0155000	2
21	Pulley	20096101	2
	Pin, 3/32 x ⅝	H0507700	2

NOTICE: THIS CONTAINS CONFIDENTIAL, PROPRIETARY AND NON PUBLIC INFORMATION OF ITEK GRAPHIX CORP. DUPLICATION OR REPRODUCTION IN WHOLE OR IN PART, OR DISCLOSURE HEREOF TO UNAUTHORIZED PERSONS WITHOUT THE PRIOR WRITTEN CONSENT OF ITEK GRAPHIX CORP. GRAPHIC SYSTEMS DIVISION IS PROHIBITED.

LATCH SIDEPLATE ASSEMBLY

20352501

Serial No. 984 and above

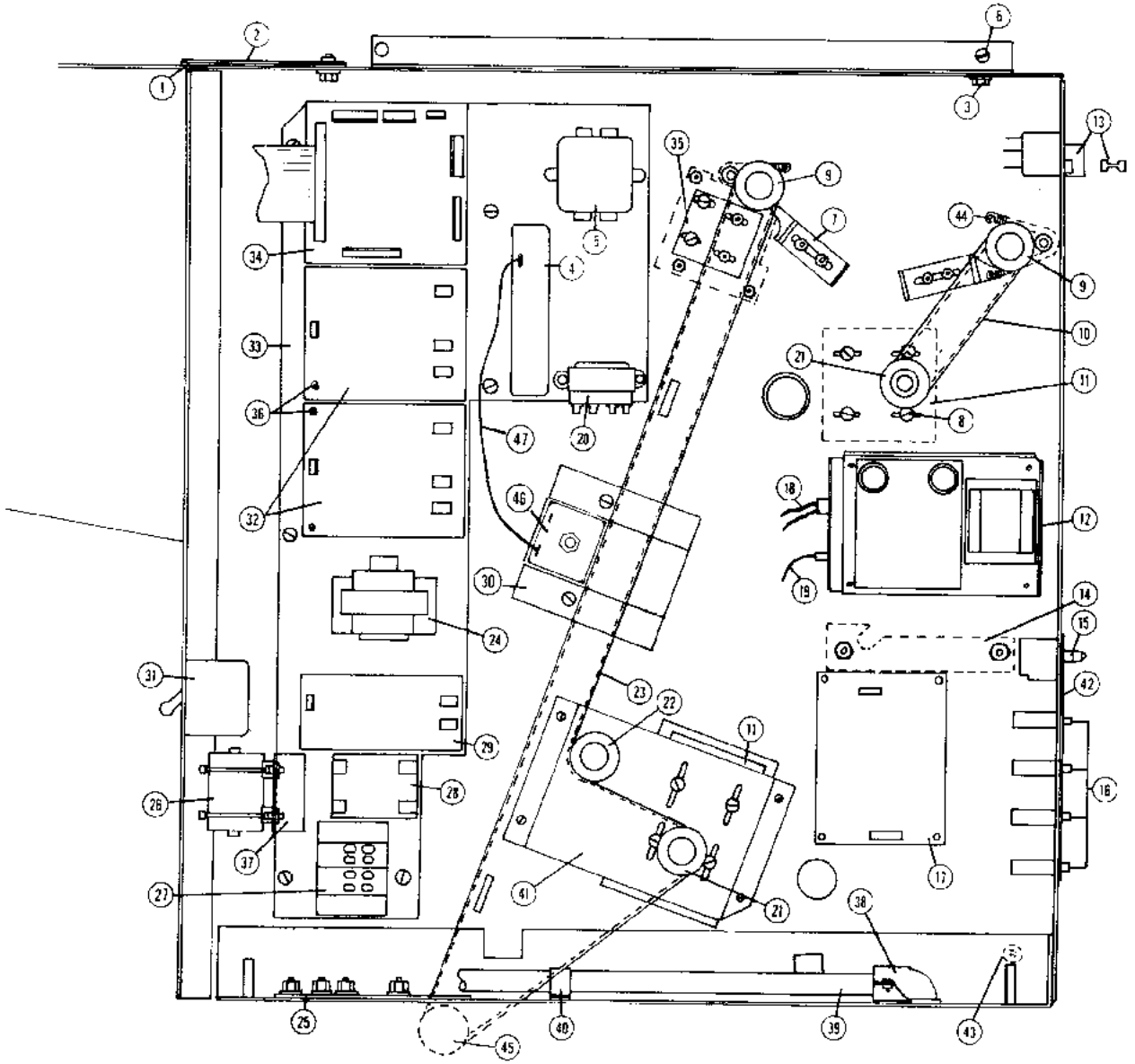

NOTICE: THIS CONTAINS CONFIDENTIAL PROPRIETARY AND NON-PUBLIC INFORMATION OF ITEK GRAPHIX CORP. DUPLICATION OR REPRODUCTION IN WHOLE OR IN PART OR DISCLOSURE THEREOF TO UNAUTHORIZED PERSONS WITHOUT THE PRIOR WRITTEN CONSENT OF ITEK GRAPHIX CORP. GRAPHIC SYSTEMS DIVISION IS PROHIBITED.

LATCH SIDE PLATE ASSEMBLY 20352501

REF.	DESCRIPTION	PART NO.	QTY.
22	Pulley	20096301	1
	Shoulder screw, ¼ 20 x 1	H0164200	1
	Nylon washer, ¼	H0188700	2
	Flat washer, ¼	H0156200	1
	Lock washer, ¼	H0155300	1
	Nut, ¼-20	H0144300	1
23	Belt	20096001	1
24	Transformer (fogger)	20246901	1
	Screw, 6-32 x ¼	H0470400	4
	Flat washer, #6	H0156400	4
	Lock washer, #6	H0155000	4
25	Ground strap assembly	20140101	1
	Flat washer, #10	H0156000	6
	Lock washer, #10	H0155200	6
	Nut, 10-32	H0144400	6
26	Choke assembly	20099701	1
	Wire tie	E0230800	2
	Tie base	20213201	1
27	Terminal block	19792402	1
	Flat washer	H0156300	2
	Nut, 8-32	H0904100	2
28	Lamp relay	19704101	1
	Flat washer, #8	H0156300	2
	Nut, 8-32	H0904100	2
29	Shutter PCB	20113101	1
30	Guard	20448601	
	Screw, 8-32 x ¼	H0471900	2
	Lock washer, #8	H0155100	2
31	Circuit breaker	09346500	1
	Nut, 8-32	H0144200	2
	Flat washer, #8	H0156300	2
	Lock washer, #8	H0155100	2
32	Triac PCB	19960709	2

REF.	DESCRIPTION	PART NO.	QTY.
33	Electrical panel complete	20257301	1
	Screw, 8-32 x 3/16	H0582600	1
	Lock washer, #8	H0155100	6
34	Interconnect PCB	20600701	1
35	Side guide bracket	20367902	1
	Nut, 4-40	H0144500	3
	Lock washer, #4	H0155700	3
	Flat washer, #4	H0156500	3
36	Standoff	20293401	16
37	Choke bracket	20220802	1
	Screw, 8-32 x 5/16	H0586000	2
	Nut, 8-32	H0144200	2
	Lock washer, #8	H0154600	2
38	Elbow	08703602	1
39	Power cable assembly	05852113	1
40	Cable clamp	40143809	1
	Screw, 8-32 x ⅜	H0472100	1
41	Transport motor bracket	20289501	1
	Screw, 8-32 x ⅜	H0482500	4
	Flat washer, #8	H0156300	4
	Lock washer, #8	H0155100	4
	Nut, 8-32	H0144200	4
42	Label	20202401	1
43	Spacer	40150176	2
	Flat washer, ¼	H0156200	4
	Lock washer, ¼	H0155300	2
	Screw, ¼-20 x ⅝	H0478300	2
44	Spring	09572400	2
45	Pulley	20247601	1
	Pin, 3/32 x ⅝	H0507700	1
46	Time Delay Module	20472002	1
	Nut, 10-32	H0904200	1
47	Wire Assembly	20448501	1

NOTICE: THIS CONTAINS CONFIDENTIAL, PROPRIETARY AND NON-PUBLIC INFORMATION OF ITEM GRAPHIX CORP. DO NOT COPY OR REPRODUCE IN WHOLE OR IN PART OR DISCLOSURE HEREOF TO UNAUTHORIZED PERSONS WITHOUT THE PRIOR WRITTEN CONSENT OF ITEM GRAPHIX CORP. GRAPHIC SYSTEMS DIVISION IS PROHIBITED.

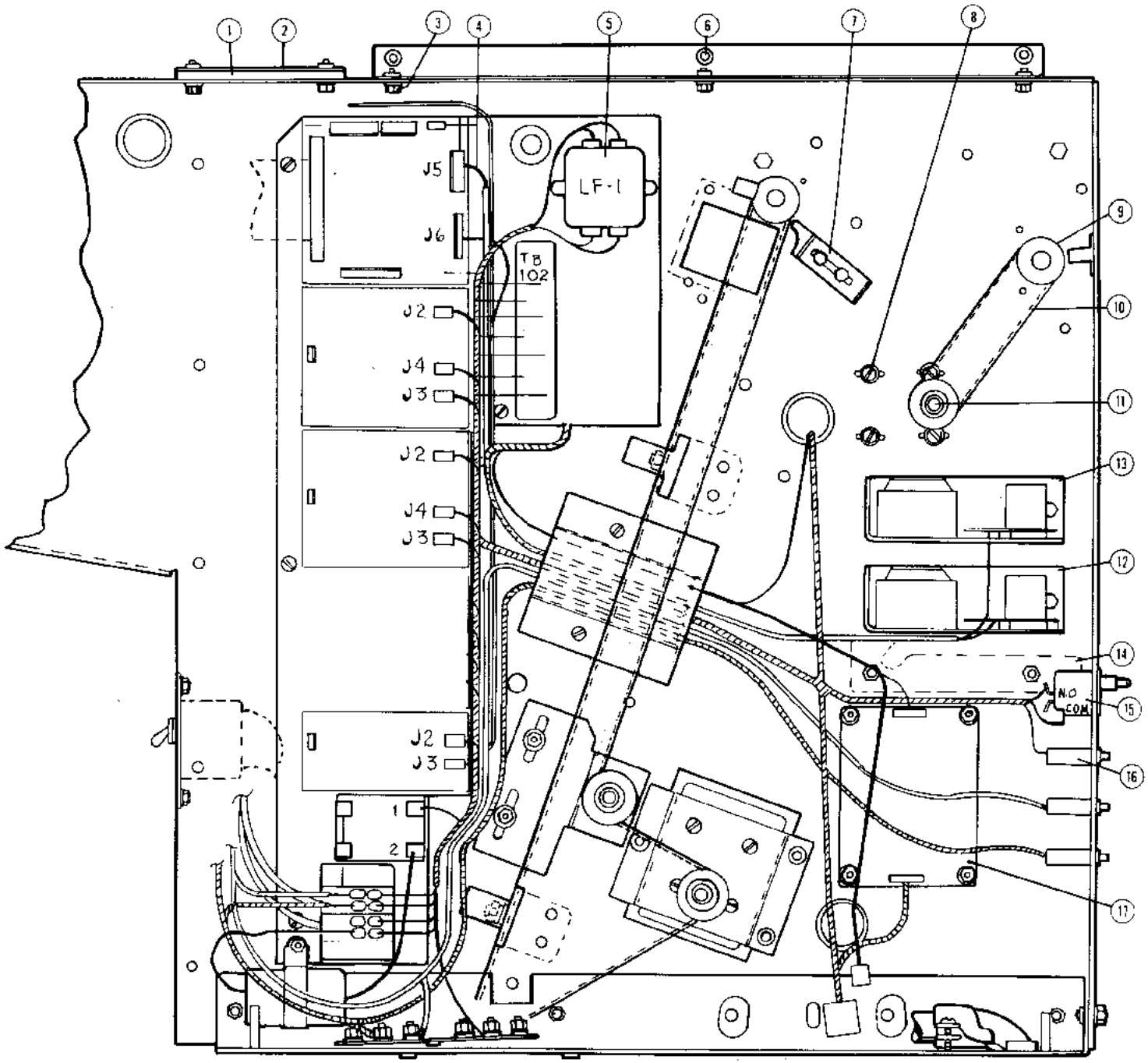

NOTICE: THIS CONTAINS CONFIDENTIAL, PROPRIETARY AND NON-PUBLIC INFORMATION OF ITEK GRAPHIX CORP. DUPLICATION OR REPRODUCTION IN WHOLE OR IN PART OR DISCLOSURE HEREOF TO UNAUTHORIZED PERSONS WITHOUT THE PRIOR WRITTEN CONSENT OF ITEK GRAPHIX CORP. GRAPHIC SYSTEMS DIVISION IS PROHIBITED.

ELECTRICAL PANEL

REF.	DESCRIPTION	PART NO.	QTY.	AFTER S/N	USE P/N	COMMENTS
1	Spacer	20046901	2			
2	Retaining plate	20046802	2			
	Cap screw 10-32 x ⅝"	H0483100	4			
	Flat washer	H0156000	4			
	Lock washer	H0155100	4			
3	Machine screw 8-32 x ⅜"	H0482500	4			
	Flat washer	H0156300	4			
	Lock washer	H0155100	4			
4	Terminal block	03692109				
5	RFI filter	40123950				
6	Machine screw 8-32 x ⅜"	H0472100	4			
7	Bracket	19875601	2			
	Machine screw 8-32 x ⅜"	H0482500	4			
	Flat washer	H0156300	4			
	Lock washer	H0155100	4			
8	Machine screw 8-32 x ⅜"	H0472100	8			
	Flat washer	H0156300	8			
	Lock washer	H0155100	8			
9	Pulley	20096101	3			
10	Belt	20095901				
11	Motor	09096201	2			
12	Power supply assy. (5.0 VDC)	19902301				
13	Power supply assy.(12.0 VDC)	19974301				
14	Paper roll bearing	20095401	2			
	Machine screw 6-32 x ⅝"	H0065500	4			
	Lock washer	H0155300	4			
	Hex nut ¼-20	H0144300	4			
15	Push button switch	20128501				
16	Circuit breaker	40121703	4			
17	Temp. cont. PCB assy.	20178201				
18	D.C. switch harness assy.	20190201				

NOTICE: THIS CONTAINS CONFIDENTIAL PROPRIETARY AND NON-PUBLIC INFORMATION OF ITEK GRAPHIX CORP. DUPLICATION OR REPRODUCTION IN WHOLE OR IN PART OR DISCLOSURE THEREOF TO UNAUTHORIZED PERSONS WITHOUT THE PRIOR WRITTEN CONSENT OF ITEK GRAPHIX CORP. GRAPHIC SYSTEMS DIVISION IS PROHIBITED.

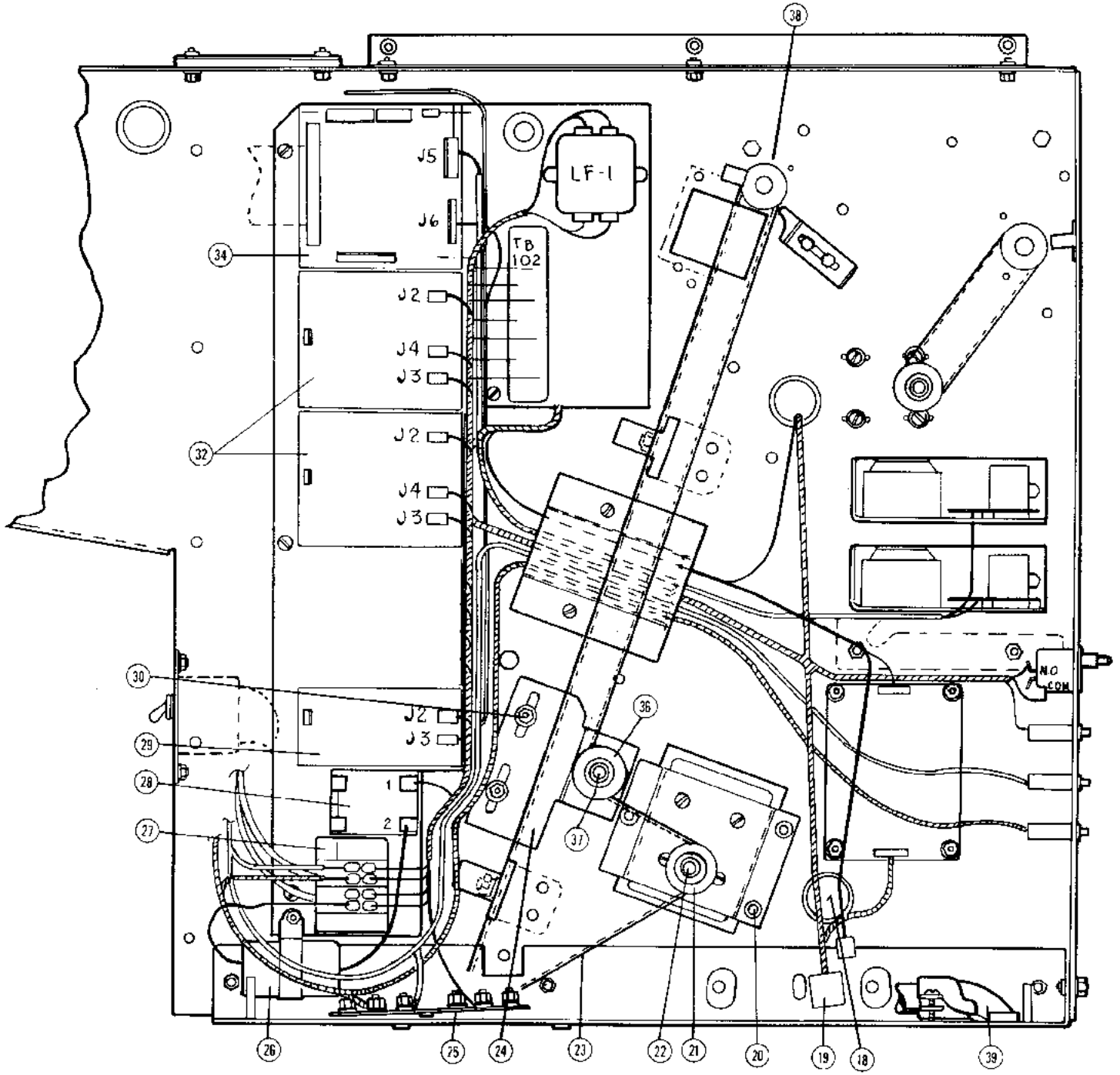

NOTICE: THIS CONTAINS CONFIDENTIAL, PROPRIETARY AND NON-PUBLIC INFORMATION OF TEKTRONIX GRAPHIX CORP. DUPLICATION OR REPRODUCTION IN WHOLE OR IN PART OR DISCLOSURE THEREOF TO ANY UNAUTHORIZED PERSONS WITHOUT THE PRIOR WRITTEN CONSENT OF TEKTRONIX GRAPHIX CORP. GRAPHIC SYSTEMS DIVISION IS PROHIBITED.

ELECTRICAL PANEL

REF.	DESCRIPTION	PART NO.	QTY.	AFTER S/N	USE P/N	COMMENTS
19	AC panel box harness assy.	20191001				
20	Machine screw 8-32 x ⅜"	H0482500				
	Lock washer	H0155100				
21	Pulley	20086101				
22	Motor	09096201				
23	Belt	20096001				
24	Idler bracket	20112501				
25	Grounding strap assy.	20140101				
	Flat washer	H0156000	6			
	Lock washer	H0155200	6			
	Hex nut 10-32	H0144400	6			
26	Filter choke assy.	20099701				
27	Terminal block	19792401				
28	Solid state relay	19704101				
29	Shutter P.C.B. assy.	20113101				
30	Flat washer	H0156200	2			
	Lock washer	H0155300	2			
	Hex nut ¼-20	H0144300	2			
31	Circuit breaker	09346500				
32	Triac board assy. (3 CKT)	19960704	2			
34	Interconnect P.C.B. assy.	20238201				
	Machine screw 6-32 x ¼"	H0470400	4			
	Flat washer	H0156400	4			
	Lock washer ext. tooth	H0158300	4			
35	Nut	H0144300	4			
36	Pulley	20096101				
37	Shoulder screw ¼-20 x 1"	H0164200				
	Nylon washer	H0188700	2			
38	Spring	09572400	2			
39	Power cord assy.	05852113				
40	Fogger transformer	20246901				

NOTICE: THIS CONTAINS CONFIDENTIAL, PROPRIETARY AND NON-PUBLIC INFORMATION OF ITEK GRAPHIX CORP. DUPLICATION OR REPRODUCTION IN WHOLE OR IN PART OR DISCLOSURE HEREOF TO UNAUTHORIZED PERSONS WITHOUT THE PRIOR WRITTEN CONSENT OF ITEK GRAPHIX CORP. GRAPHIC SYSTEMS DIVISION IS PROHIBITED.

ACCESSORIES

NOTICE: THIS CONTAINS CONFIDENTIAL, PROPRIETARY AND NON-PUBLIC INFORMATION OF ITEK GRAPHIX CORP. DUPLICATION OR REPRODUCTION IN WHOLE OR IN PART OR DISCLOSURE THEREOF TO UNAUTHORIZED PERSONS WITHOUT THE PRIOR WRITTEN CONSENT OF ITEK GRAPHIX CORP. GRAPHIC SYSTEMS DIVISION IS PROHIBITED.

SIDE GUIDE ASSEMBLY
20375601

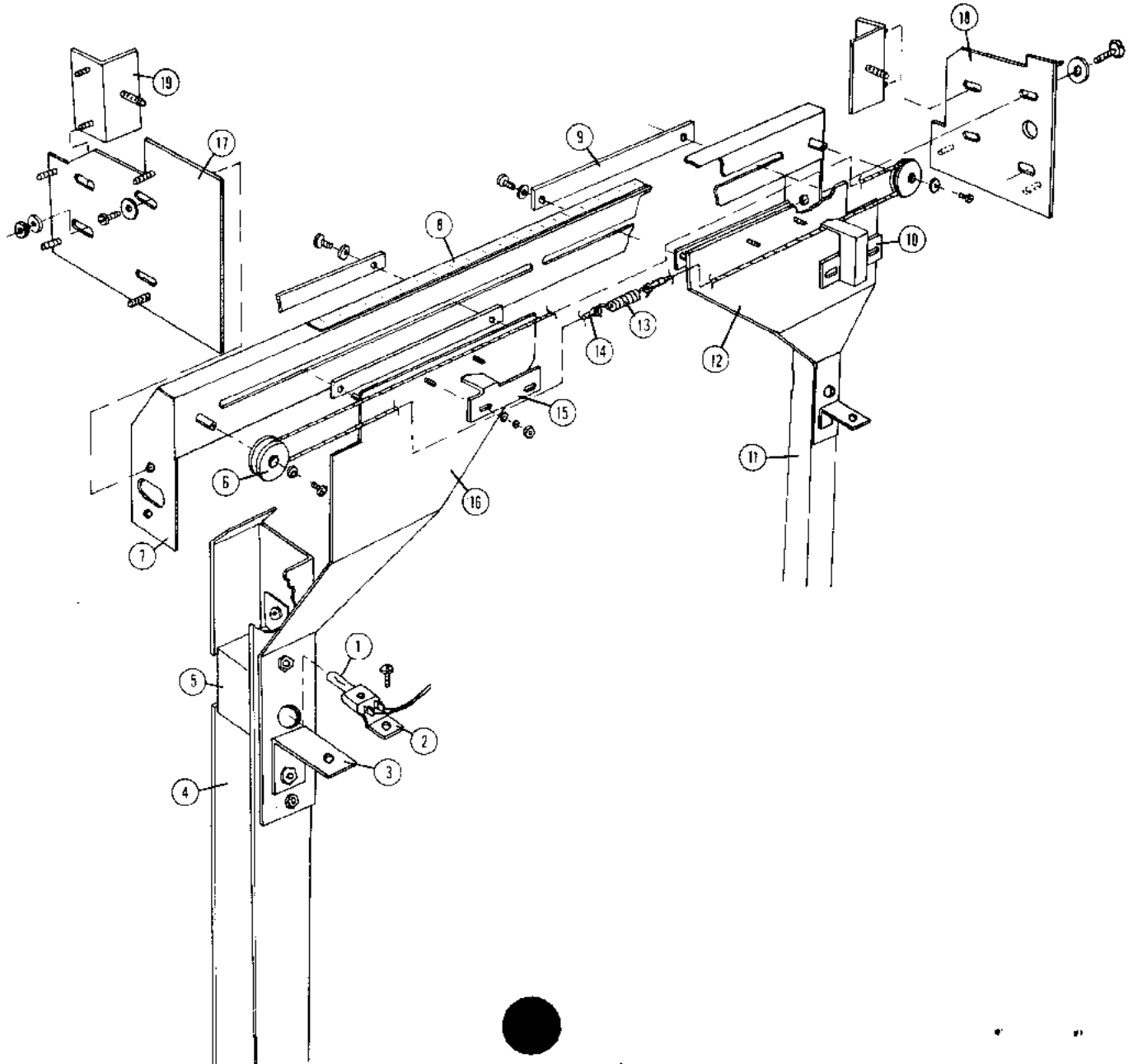

NOTICE: THIS DOCUMENT CONTAINS CONFIDENTIAL, PROPRIETARY AND NON-PUBLIC INFORMATION OF ITEK GRAPHIX CORP. DUPLICATION OR REPRODUCTION IN WHOLE OR IN PART OR DISCLOSURE HEREOF TO UNAUTHORIZED PERSONS WITHOUT THE PRIOR WRITTEN CONSENT OF ITEK GRAPHIX CORP. GRAPHIC SYSTEMS DIVISION IS PROHIBITED.

Side Guide Assembly 20375601

REF.	DESCRIPTION	PART NO.	QTY.
1	Lamp	19214301	2
2	Harness Assembly (includes sockets)	20386701	1
	Screw, 4-40 x 5/16	H0585200	2
	Lock Washer, #4	H0155700	2
3	Lamp Mount Angle	20368801	2
	Nut, 6-32	H0144100	2
	Lock Washer, #6	H0155000	2
	Flat Washer, #6	H0156400	2
4	Channel Assembly L.H.	20368501	1
	Nut, 6-32	H0144100	4
	Lock Washer, #6	H0155000	4
	Flat Washer, #6	H0156400	2
5	Lamp Cover	20368900	2
	Nut, 6-32	H0144100	4
	Lock Washer, #6	H0155000	4
	Flat Washer, #6	H0156400	4
	Light Gate Plate	20429901	2
6	Cable Roller	20297701	2
	Screw, 6-32 x 3/16	H0470300	4
	Lock Washer, #6	H0155000	4
	Flat Washer, #6	H0156400	4
7	Pulley Bracket Assembly	20368001	1
8	Scale	20376301	1
9	Spacer	20388701	4
	Screw, 6-32 x ⅜	H0065400	4
	Lock Washer, #6	H0155000	4
	Flat Washer, #6	H0156400	4
10	Pointer Handle	20361201	1
	Nut, 6-32	H0144100	2
	Lock Washer, #6	H0155000	2
	Flat Washer, #6	H0156400	2

REF.	DESCRIPTION	PART NO.	QTY.
11	Channel Assembly R.H.	20368701	1
12	Arm, R.H.	20368301	1
13	Spring	19954401	1
14	Cable	20369001	1
15	Pointer	20361101	1
	Nut, 6-32	H0144100	2
	Lock Washer, #6	H0155000	2
	Flat Washer, #6	H0156400	2
16	Arm, L.H.	20368201	1
17	Side Guide Bracket H.S.	20367801	1
	Nut, 4-40	H0144500	4
	Flat Washer, #4	H0156500	4
	Lock Washer, #4	H0155700	4
	Screw, 8-32 x ¼	H0471900	2
	Flat Washer, #8	H0156300	2
	Lock Washer, #8	H0155100	2
18	Side Guide Bracket L.H.	20367902	1
	Nut, 4-40	H0144500	3
	Flat Washer, #4	H0156500	3
	Lock Washer, #4	H0155700	3
	Screw, 8-32 x ¼	H0471900	2
	Flat Washer, #8	H0156300	2
	Lock Washer, #8	H0155100	2
19	Guide Bracket	20171001	2
	Nut, 6-32	H0144100	4
	Lock Washer, #6	H0155000	4
	Flat Washer, #6	H0156400	4
	Nut, 8-32	H0144200	2
	Flat Washer, #8	H0156300	2
	Lock Washer, #8	H0155100	2

NOTICE: THIS CONTAINS CONFIDENTIAL, PROPRIETARY AND NON-PUBLIC INFORMATION OF ITEK GRAPHIX CORP. DUPLICATION OR REPRODUCTION IN WHOLE OR IN PART OR DISCLOSURE THEREOF TO UNAUTHORIZED PERSONS WITHOUT THE PRIOR WRITTEN CONSENT OF ITEK GRAPHIX CORP. GRAPHIC SYSTEMS DIVISION IS PROHIBITED.

VACUUM COPYBOARD ASSEMBLY
20334001

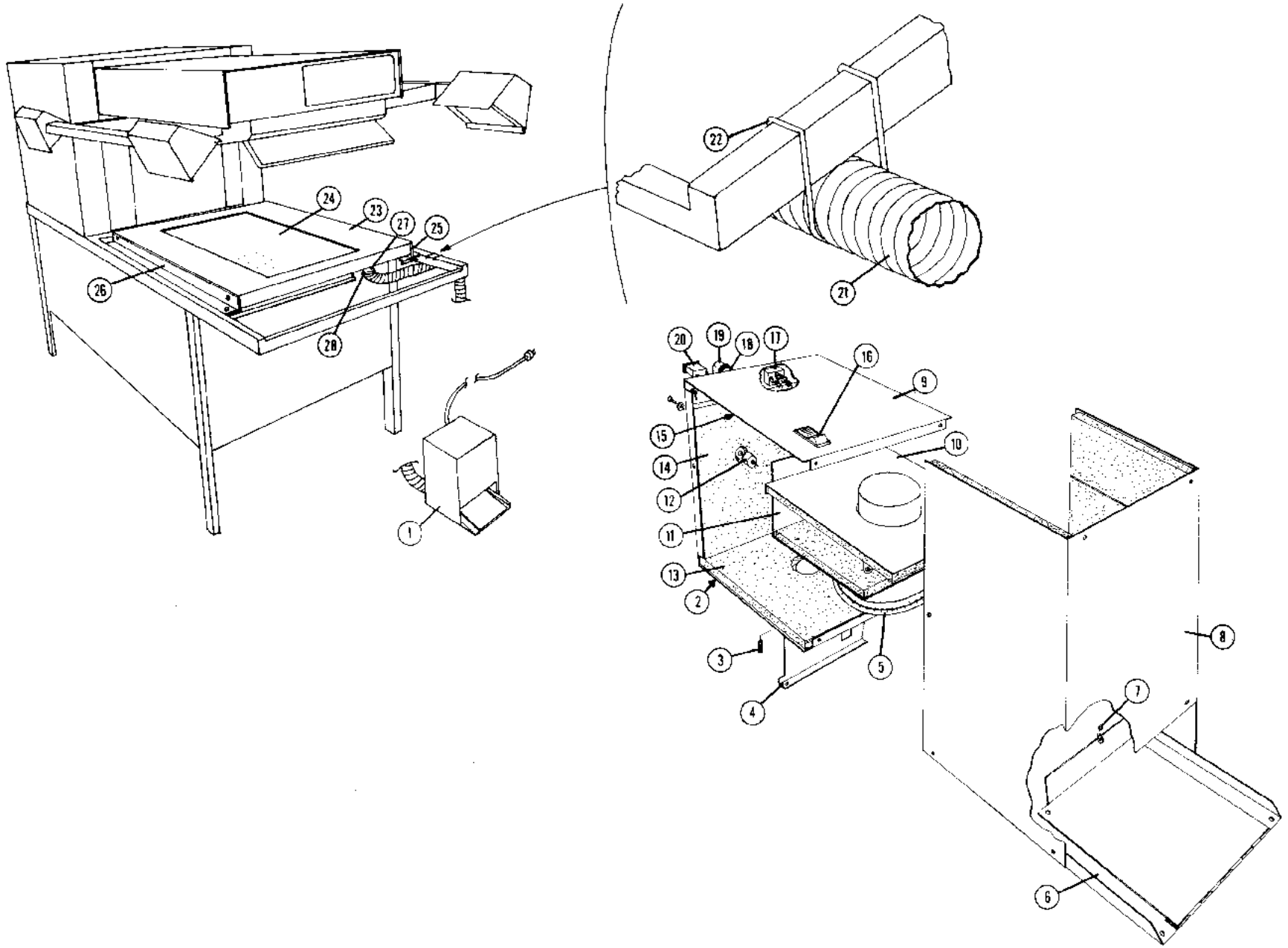

NOTICE: THIS CONTAINS CONFIDENTIAL, PROPRIETARY AND NON-PUBLIC INFORMATION OF ITEK GRAPHIX CORP. DUPLICATION OR REPRODUCTION IN WHOLE OR IN PART OR DISCLOSURE HEREOF TO UNAUTHORIZED PERSONS WITHOUT THE PRIOR WRITTEN CONSENT OF ITEK GRAPHIX CORP. GRAPHIC SYSTEMS DIVISION IS PROHIBITED.

Vacuum Copyboard Assembly 20334001

REF.	DESCRIPTION	PART NO.	QTY.
1	Blower Assembly Complete	20334101	1
2	Foot	19837301	2
3	Spring	20335401	2
4	Valve Assembly	20328601	1
	Nut, 6-32	H0904000	2
	Spacer, .62" x 5.0"	20328100	1
5	Blower Only	20333901	1
6	Treadle Assembly	20368401	1
	Screw, 8-32 x ¼	H0471900	4
	Lock Washer, #8	H0155100	4
7	Link	20327101	1
8	Cover Assembly	20335801	1
	Foam, 1.5" x 7.0"	20329401	1
	Foam, 3.6" x 7.0"	20336301	1
	Foam, 3.6" x 7.5"	20329301	1
	Foam, 2.0" x 7.5"	20329501	1
	Screw, 8-32 x ¼	H0471900	6
	Lock Washer, #8	H0155100	6
9	Blower Housing Assembly Complete	20334601	1
10	Shield Assembly	20336501	1
	Foam, 7.5" x 8.0"	20328901	1
	Screw, 10-32 x ½	H0465200	2
	Lock Washer, #10	H0155200	1
11	Blower Bracket Assembly Complete	20332901	1
	Blower	20333901	1
	Foam	20329001	1
	Bracket	20328401	1
	Screw, 10-32 x 1	H0065700	4
	Washer	09888600	4
	Vibration Isolator	20050702	4
	Nyliner	06754800	4
	Vibration Isolator	20050701	4
12	Spacer	40150179	3
	Screw, 10-32 x 1	H0065700	3
	Lock Washer, #10	H0155200	3
	Flat Washer, #10	H0156000	3

REF.	DESCRIPTION	PART NO.	QTY.
13	Foam	20329101	1
14	Foam	20329201	1
15	Foam	20328801	1
16	Switch	19229701	1
17	Rectifier	40127503	1
	Nut, 8-32	H0144200	1
	Lock Washer, #8	H0155100	1
	Heatsink Compound	H0833700	A/R
18	Power Cord	20334401	1
19	Strain Relief	40128312	1
20	Circuit Breaker	40121704	1
21	Flex Hose	19491901	1
22	Wire Clamp	20364201	1
23	Mask	20363401	1
24	Vacuum Platen Assembly Complete	20327301	1
	Screw, ¼-20 x 2	H0484700	4
	Nut, ¼-20	H0124200	12
	Vacuum Platen Only	20332101	1
35	Angle, R.H.	20362201	1
	Angle, R.H. (70%)	20387901	1
26	Angle, L.H.	20362101	1
	Angle, L.H. (70%)	20387801	1
	Screw, 8-32 x 3/16	H0586000	4
	Lock Washer, #8	H0155100	4
27	Vacuum Box	20327601	1
	Vacuum Box (70%)	20388301	1
	Screw, 8-32 x 5/16	H0586000	4
	Lock Washer, #8	H0155100	4
	Flat Washer, #8	H0156300	4
	Self Tap Screw, 10 x ½	H0269400	1
	Washer, #10	H0156900	1
	Adhesive	H0885400	A/R
28	Hose Clamp	08327601	2

NOTICE: THIS CONTAINS CONFIDENTIAL, PROPRIETARY AND NON-PUBLIC INFORMATION OF ITEX GRAPHIX CORP. IMPLICATIONS OR REPRODUCTION IN WHOLE OR IN PART OR DISCLOSURE HEREOF TO UNAUTHORIZED PERSONS WITHOUT THE PRIOR WRITTEN CONSENT OF ITEX GRAPHIX CORP. GRAPHIC SYSTEMS DIVISION IS PROHIBITED.

DRYER ASSEMBLY
20457101

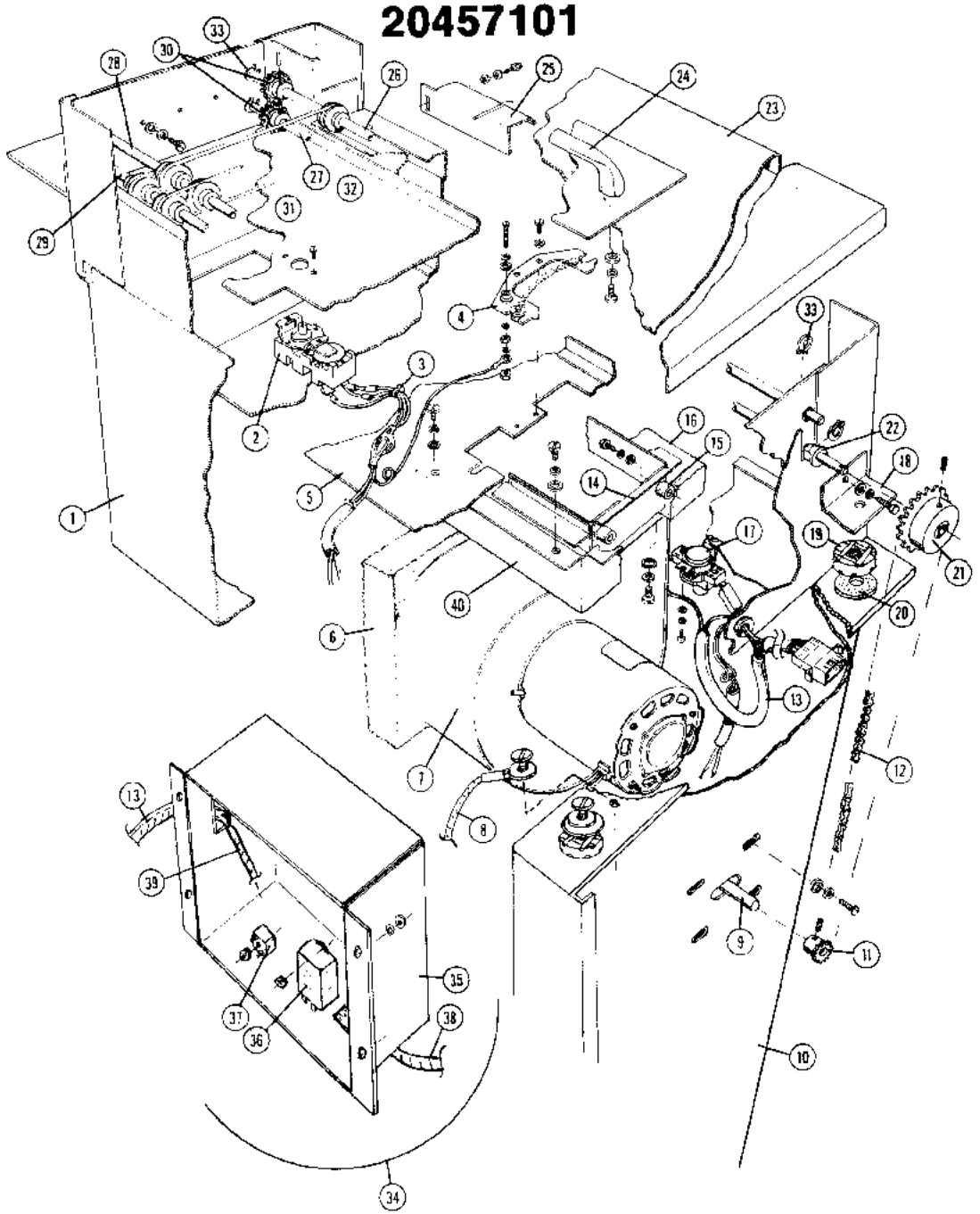

NOTICE: THIS CONTAINS CONFIDENTIAL PROPRIETARY AND NON PUBLIC INFORMATION OF ITEK GRAPHIX CORP. DUPLICATION OR REPRODUCTION (IN WHOLE OR IN PART) OR DISCLOSURE HEREOF TO UNAUTHORIZED PERSONS WITHOUT THE PRIOR WRITTEN CONSENT OF ITEK GRAPHIX CORP. GRAPHIC SYSTEMS DIVISION IS PROHIBITED.

DRYER ASSEMBLY COMPLETE 20457101

REF.	DESCRIPTION	PART NO.	QTY.
1	Dryer bottom & shell	20466601	1
2	Temperature Control	19634901	1
	Screw, 6 x ¼	H0263400	2
3	Wire tie	E0230700	A/R
4	Heater assembly	19530201	1
	Screw, 6-32 x 5/16	H0470200	2
	Screw, 6-32 x ¾	H0003900	2
	Lock washer, #6	H0155000	4
	Flat Washer, #6	H0156400	4
5	Baffle weldment	20465801	1
6	Inlet seal	20487701	1
7	Blower	19547401	1
	Hex head screw, 8-32 x 5/16	H0482700	4
	Washer, #8	H0156300	4
	Lock washer #8	H0155100	4
8	Cable restraint	20313601	2
9	Motor	19522601	1
	Screw, 8-32 x ¾	H0472600	4
	Lock washer	H0155100	4
	Flat washer	H0156300	4
10	Support arm weld. (shown)	20464601	1
	Support arm weld. (n.s.)	20464501	1
11	Sprocket, 15T	09744505	1
	Set screw, 10-32 x ⅜	H0116400	1
12	Chain, ¼ pitch	40144692	1
	Connecting link, ¼ pitch	07294000	1
13	Wire harness	20490001	1
14	Blower bracket assembly	19652501	1
15	Shock mount	09773400	4
16	Seal	19530401	
17	Limit control	19635001	1
	Screw, 6-32 x 5/16	H0470200	2
	Washer, #6	H0156400	2
18	Dryer bracket	20471501	2
19	Vibration Isolator	19803201	8
20	Washer	19348601	4
	Washer	09888600	4
	Screw, 10-32 x 1¼	H0473000	4

REF.	DESCRIPTION	PART NO.	QTY.
21	Sprocket, 30T	40150810	1
	Pin, 3/32 x 1⅜	H0509400	1
22	Bearing	09787800	2
23	Cover	20461701	1
24	Handle	19531401	1
	Heat shield	19653201	1
	Screw, 10-32 x ⅜	40465400	2
	Lock washer, #10	H0155200	2
	Flat washer, #10	H0156000	2
25	Guide	20457501	2
	Nut, 8-32	H0144200	4
	Lock washer, #8	H0155100	4
	Flat washer, #8	H0156300	4
26	Pulley & shaft assembly	20458101	1
	Shaft only	20457901	1
27	Pulley & shaft assembly	20457701	1
	Shaft only	20457601	
28	Pulley & shaft assembly	20458001	1
	Shaft only	20457901	
29	Pulley & shaft assembly	20461501	1
	Shaft only	20457901	
30	Gear	19860201	2
	Pin, 3/32 x ⅝	H0507500	2
31	Belt (O-ring)	19511301	22
32	Pulley	19511401	44
	Tolerance ring	40149216	44
33	Retaining ring	H0928700	1
34	Relay box complete	20471801	1
35	Relay Box	20471701	1
36	Relay	20444301	1
	Nut, 8-32	H0904100	2
37	Rectifier	40127503	1
	Nut, 8-32	H0904100	1
38	Cable (striker & switch assembly)	20489501	1
39	Harness, relay box	20491801	1
40	Bracket assembly	09646501	1
	Screw, 8-32 x ⅝	H0586000	4
	Washer, #8	H0156300	4
	Lock washer, #8	H0155100	4

NOTICE: THIS CONTAINS CONFIDENTIAL, PROPRIETARY AND NON-PUBLIC INFORMATION OF ITEK GRAPHIX CORP. DUPLICATION OR REPRODUCTION IN WHOLE OR IN PART OR DISCLOSURE HEREOF TO UNAUTHORIZED PERSONS WITHOUT THE PRIOR WRITTEN CONSENT OF ITEK GRAPHIX CORP. GRAPHIC SYSTEMS DIVISION IS PROHIBITED.

DRYER ASSEMBLY
20457101

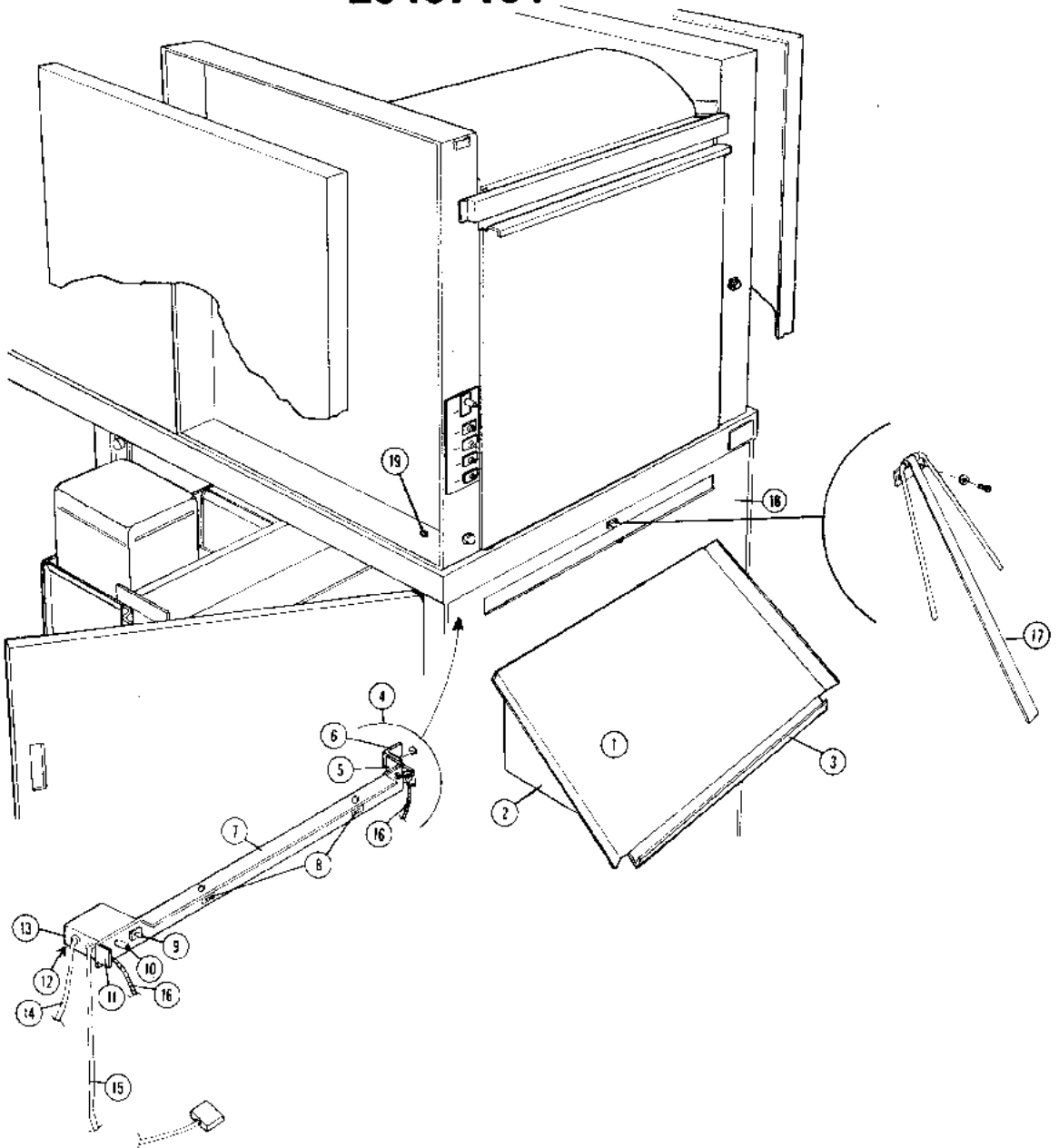

NOTICE: THIS CONTAINS CONFIDENTIAL PROPRIETARY AND NON-PUBLIC INFORMATION OF ITEK GRAPHIX CORP. DUPLICATION OR REPRODUCTION IN WHOLE OR IN PART, OR DISCLOSURE HERE OF TO UNAUTHORIZED PERSONS WITHOUT THE PRIOR WRITTEN CONSENT OF ITEK GRAPHIX CORP. GRAPHIC SYSTEMS DIVISION IS PROHIBITED.

DRYER ASSEMBLY COMPLETE 20457101

REF.	DESCRIPTION	PART NO.	QTY.
1	Plate stacker complete	20472801	1
2	Mount bracket weldment	20472601	1
3	Stacker slide	20484101	1
	Screw, 10-32 x 5/16	H0030500	2
	Nut, 10-32	H0122200	2
	Nut, nylon, 10-32	H0140000	2
	Set screw, 10-32 x ⅝	H0111200	2
4	Striker bracket assembly complete	20485501	1
5	Bracket	20483101	1
	Flat washer, #8	H0156300	1
	Lock washer, #8	H0155100	1
	Nut, 8-32	H0144200	1
6	Bracket	20505501	1
	Flat washer, #8	H0156300	1
	Lock washer, #8	H0155100	1
	Nut, 8-32	H0144200	1
7	Striker bracket only	20466401	1
8	Magnetic catch	08974201	2
9	Circuit breaker	40121705	1
10	Switch	20355401	1
11	Bracket	20483201	1
	Flat washer, #8	H0156300	2
	Lock washer, #8	H0155100	2
	Nut, 8-32	H0144200	2
12	Cover	20471901	1
	Screw, 6-32 x ¼	H0470400	2
	Lock washer, #6	H0155000	2
	Flat washer, #6	H0156400	2

REF.	DESCRIPTION	PART NO.	QTY.
13	Switch box	20471601	1
	Nut, 8-32	H0904100	2
	Grommet	09204700	2
14	Cable to magazine	20491701	1
15	Cable to dryer relay box	20489501	1
16	Dryer restraint cable	20313601	2
	Flat washer, #8	H0156300	2
	Lock washer, #8	H0155100	2
	Nut, 8-32	H0144200	2
17	Stacker guide assembly	19112601	1
	Screw, 6-32 x ⅜	H0065400	2
	Lock washer, #6	H0155000	2
	Flat washer, #6	H0156400	2
18	Rear panel	20466001	1
	Support Arm, L.S.	20464301	1
	Support Arm, H.S.	20464201	1
	Support Arm Bottom - Bracket, L.S.	20529701	1
	Support Arm Bottom - Bracket, H.S.	20529601	1
	Flat Washer, ¼	H0156200	10
	Lock Washer, ¼	H0155300	10
	Nut, 14/20	H0144300	10
19	Grommet	09204701	

NOTICE: THIS CONTAINS CONFIDENTIAL, PROPRIETARY AND NON-PUBLIC INFORMATION OF ITEK GRAPHIX CORP. DUPLICATION OR REPRODUCTION IN WHOLE OR IN PART OR DISCLOSURE HEREOF TO OTHER UNAUTHORIZED PERSONS WITHOUT THE PRIOR WRITTEN CONSENT OF ITEK GRAPHIX CORP. GRAPHIC SYSTEMS DIVISION IS PROHIBITED.